GEBWELL

Installation Manual

Installation set for ground source heat pump

WWW.GEBWELL.COM

TABLE OF CONTENTS

The installation set makes installation faster **3**

Content of the delivery **3**

INSTALLATION SET (ASPARIES, HVAC number: 5362615) **3**

COOLING SUPPLIES FOR INSTALLATION SET (ASPLVVIIL, HVAC number 5362616) **3**

HEATING PUMP EXTENSION FOR INSTALLATION SET (ASPLVPUMP, HVAC number 5362617) **3**

Dimensions and connections **4**

INSTALLATION SET **4**

Dimensions 4

Connections 4

INSTALLATION SET WITH COOLING ACCESSORIES **5**

Dimensions 5

Adding cooling accessories to the installation set 5

Connections 5

INSTALLATION SET WITH HEATING PUMP EXTENSION **6**

Dimensions 6

Adding the heating pump extension to the installation set 6

Connections 6

INSTALLATION SET WITH COOLING ACCESSORIES AND HEATING PUMP EXTENSION **7**

Dimensions 7

Adding the heating pump extension and cooling supplies to the installation set 7

Connections 7

Cleaning the heating filter **8**

THE INSTALLATION SET MAKES INSTALLATION FASTER

The installation set is an accessory designed for Gebwell's Qi and Aries ground source heat pumps. It includes the majority of components needed for installation, making the work faster and easier.

The installation set can be modified for different sites with a variety of extensions. Adding cooling supplies (ASPLVVIIL) will adapt the installation set to buildings that also use the ground source heating system for cooling. The heating pump extension (ASPLVPUMP) adds a heating circulation pump to the installation set, making it particularly suitable for buildings with radiator heating.

The installation set extensions are delivered as components installed into the installation set on site according to this manual.

CONTENT OF THE DELIVERY

INSTALLATION SET
(ASPARIES, HVAC NUMBER: 5362615)

- Filling group for collector
- Expansion tank of 12l for collector
- Safety Valve for collector 2.5 bar
- Filling group for heating circuit
- Expansion tank of 12l for heating circuit
- Safety Valve for heating circuit 2.5 bar
- Shut-off valve for heating circuit
- Filter for heating circuit
- Pressure meters for collector and heating circuit
- Mixing valve for DHW
- Safety valve for DHW 10 bar
- Hanging hooks for adjusting the mounting height of the set

COOLING SUPPLIES FOR INSTALLATION SET
(ASPLVVIIL, HVAC NUMBER 5362616)

- Cooling pump
- Maintenance seals output/return
- Non-return valve
- Cooling control centre

HEATING PUMP EXTENSION FOR INSTALLATION SET
(ASPLVPUMP, HVAC NUMBER 5362617)

- Circulating pump
- Non-return valve
- Connectors

DIMENSIONS AND CONNECTIONS

INSTALLATION SET

(ASPARIES, 5362615)

DIMENSIONS

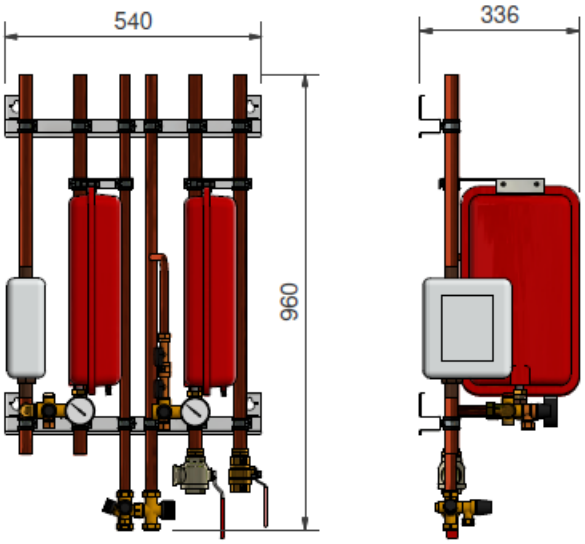

CONNECTIONS

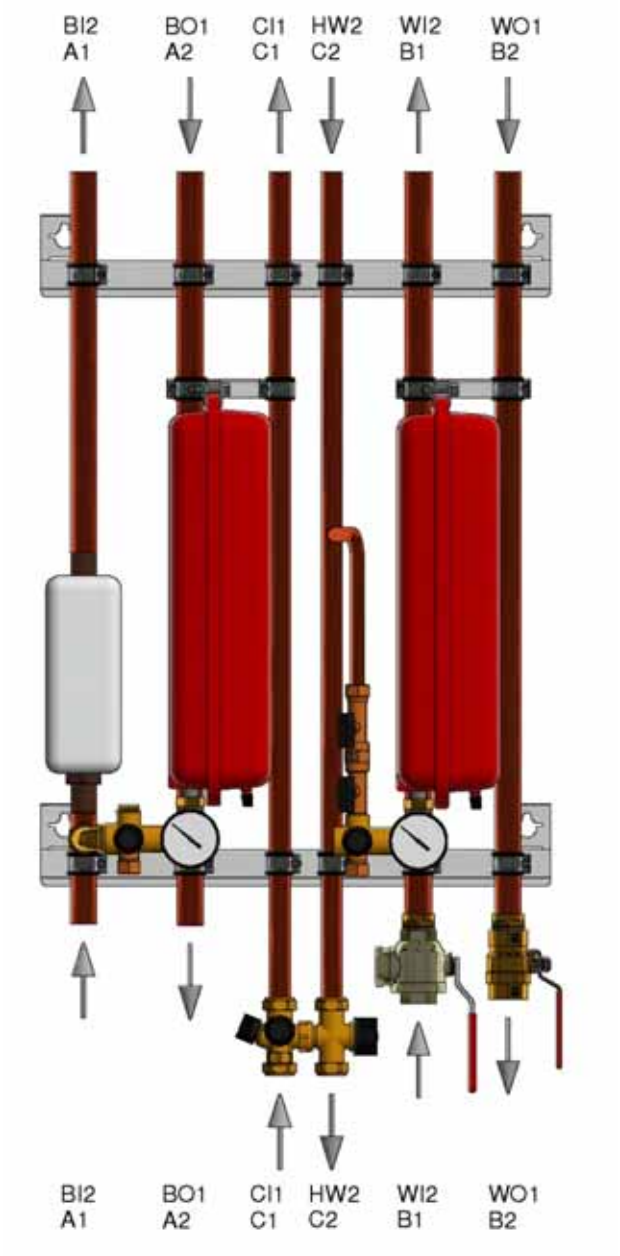

Aries / Qi

BI2 / A1	Brine from ground to heat pump, *Cu, 28mm*
BO1 / A2	Brine from heat pump to ground, *Cu 28mm*
CI1 / C1	Cold water to heat pump accumulator, *Cu 22mm*
HW2 / C2	Domestic hot water from heat pump, *22mm ms compression connector*
WI2 / B1	Heating network return to heat pump, *1" it*
WO1 / B2	Heating network output from heat pump, *1" it*

INSTALLATION SET WITH COOLING ACCESSORIES

(ASPARIES, 5362615 + ASPLVVIIL, 5362616)

DIMENSIONS

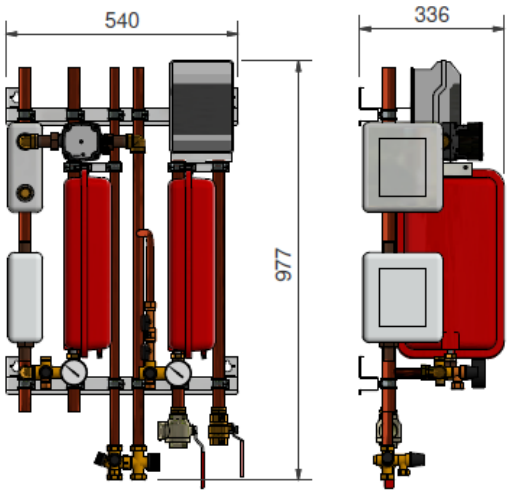

CONNECTIONS

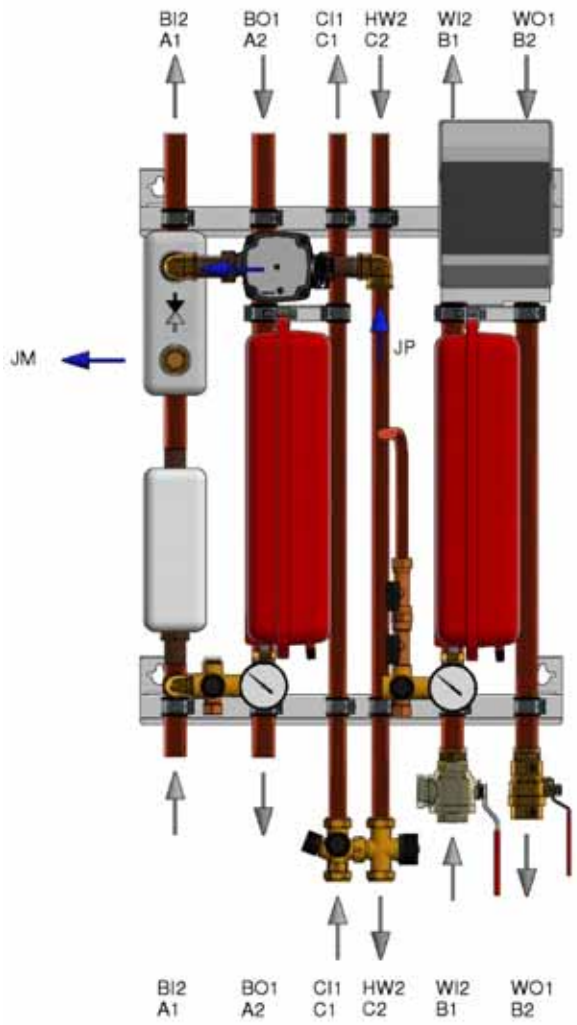

ADDING COOLING ACCESSORIES TO THE INSTALLATION SET

The cooling accessories are delivered as separate components with the installation set and installed into the installation set on site.

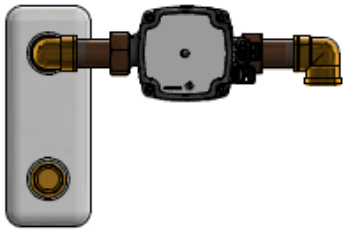

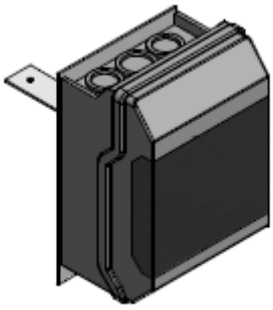

Aries / Qi

BI2 / A1	Brine from ground to heat pump, *Cu 28mm*
BO1 / A2	Brine from heat pump to ground, *Cu 28mm*
CI1 / C1	Cold water to heat pump accumulator, *Cu 22mm*
HW2 / C2	Domestic hot water from heat pump, *22mm ms compression connector*
WI2 / B1	Heating network return to heat pump, *1" it*
WO1 / B2	Heating network output from heat pump, *1" sk*
JM	Cooling output to external cooling device, DN20
JP	Cooling return from external cooling device, DN20

INSTALLATION SET WITH HEATING PUMP EXTENSION

(ASPARIES, 5362615 + ASPLPUMP, 5362617)

DIMENSIONS

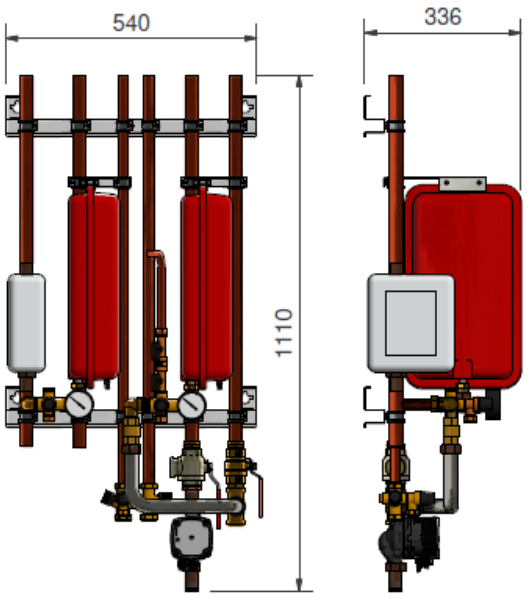

ADDING THE HEATING PUMP EXTENSION TO THE INSTALLATION SET

The heating pump extension is delivered as separate components with the installation set and installed into the installation set on site.

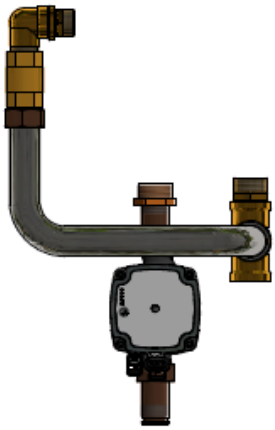

CONNECTIONS

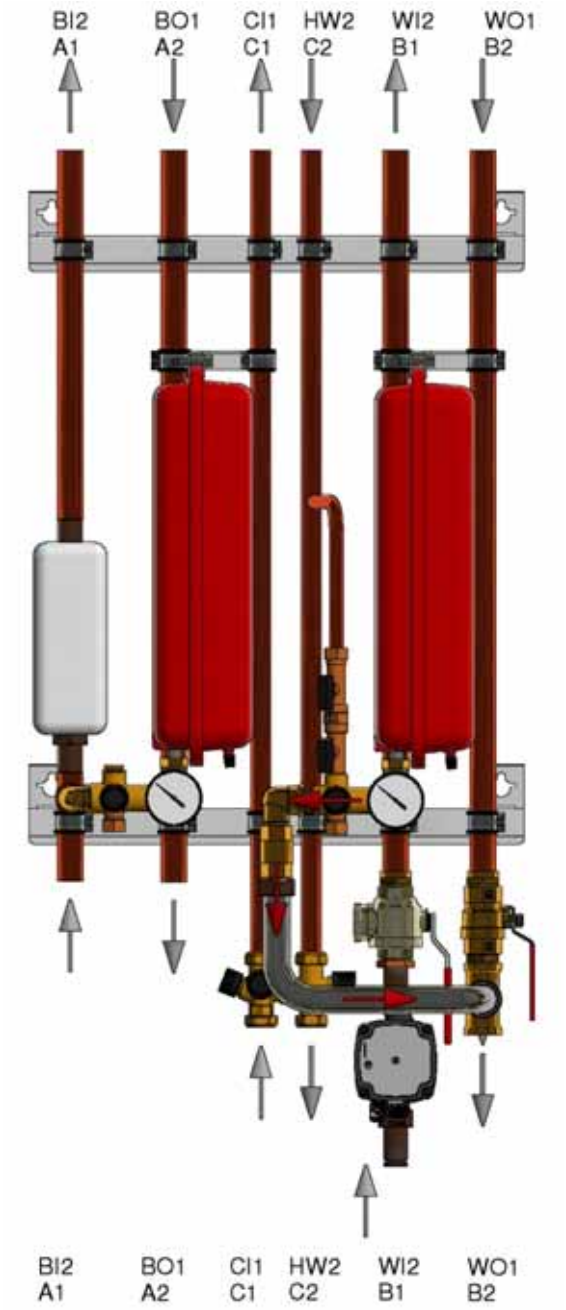

Aries / Qi

BI2 / A1	Brine from ground to heat pump, *Cu 28mm*
BO1 / A2	Brine from heat pump to ground, *Cu 28mm*
CI1 / C1	Cold water to heat pump accumulator, *Cu 22mm*
HW2 / C2	Domestic hot water from heat pump, *22mm ms compression connector*
WI2 / B1	Heating network return to heat pump, *¾" et*
WO1 / B2	Heating network output from heat pump, *1" it*

INSTALLATION SET WITH COOLING ACCESSORIES AND HEATING PUMP EXTENSION

(ASPARIES, 5362615 + ASPLVVIIL, 5362616 + ASPLPUMP, 5362617)

DIMENSIONS

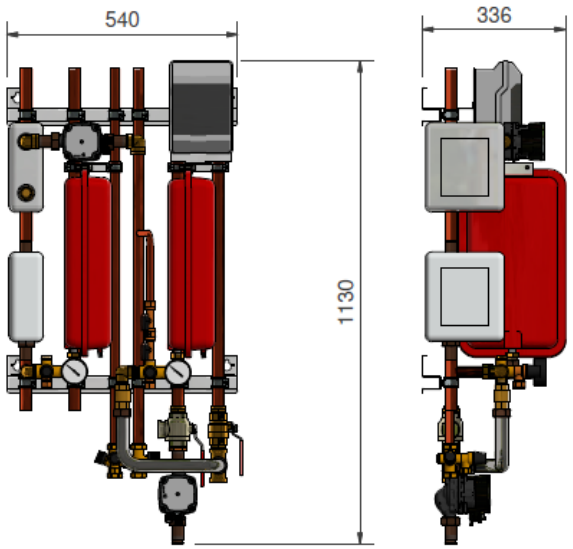

ADDING THE HEATING PUMP EXTENSION AND COOLING SUPPLIES TO THE INSTALLATION SET

The heating pump extension and cooling accessories are delivered as separate components with the installation set and installed into the installation set on site.

HEATING PUMP EXTENSION

COOLING ACCESSORIES

CONNECTIONS

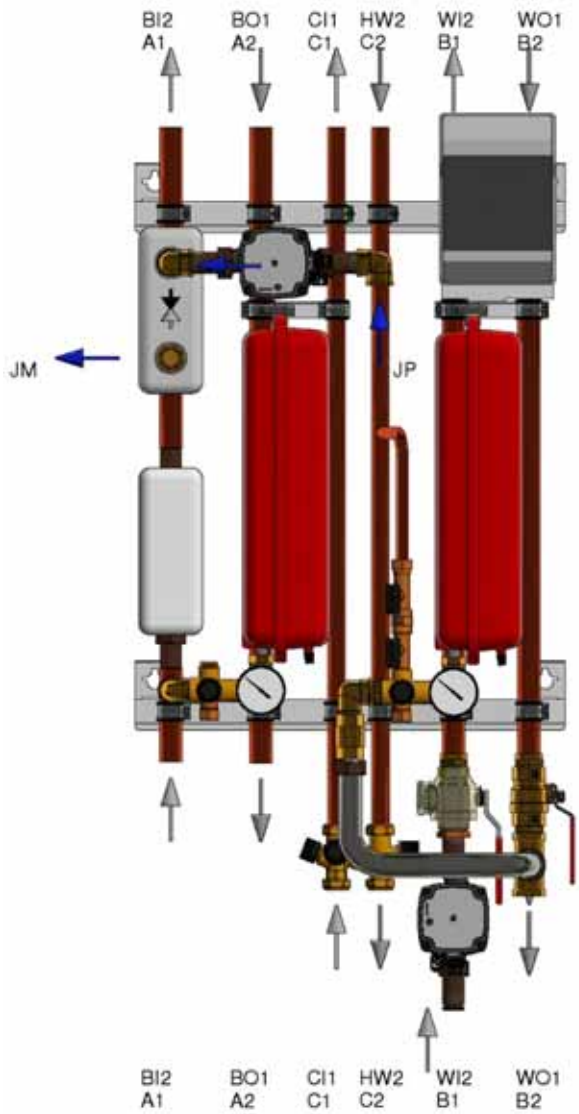

Aries / Qi

BI2 / A1	Brine from ground to heat pump, *Cu 28mm*
BO1 / A2	Brine from heat pump to ground, *Cu 28mm*
CI1 / C1	Cold water to heat pump accumulator, *Cu 22mm*
HW2 / C2	Domestic hot water from heat pump, *22mm ms compression connector*
WI2 / B1	Heating network return to heat pump, *1" it*
WO1 / B2	Heating network return to heat pump, *¾" et*
JM	Cooling output to external cooling device, DN20
JP	Cooling return from external cooling device, DN20

CLEANING THE HEATING FILTER

Clean the heating filter as shown in the figure below

Fig. 1

Fig. 2

Fig. 3

Fig. 4

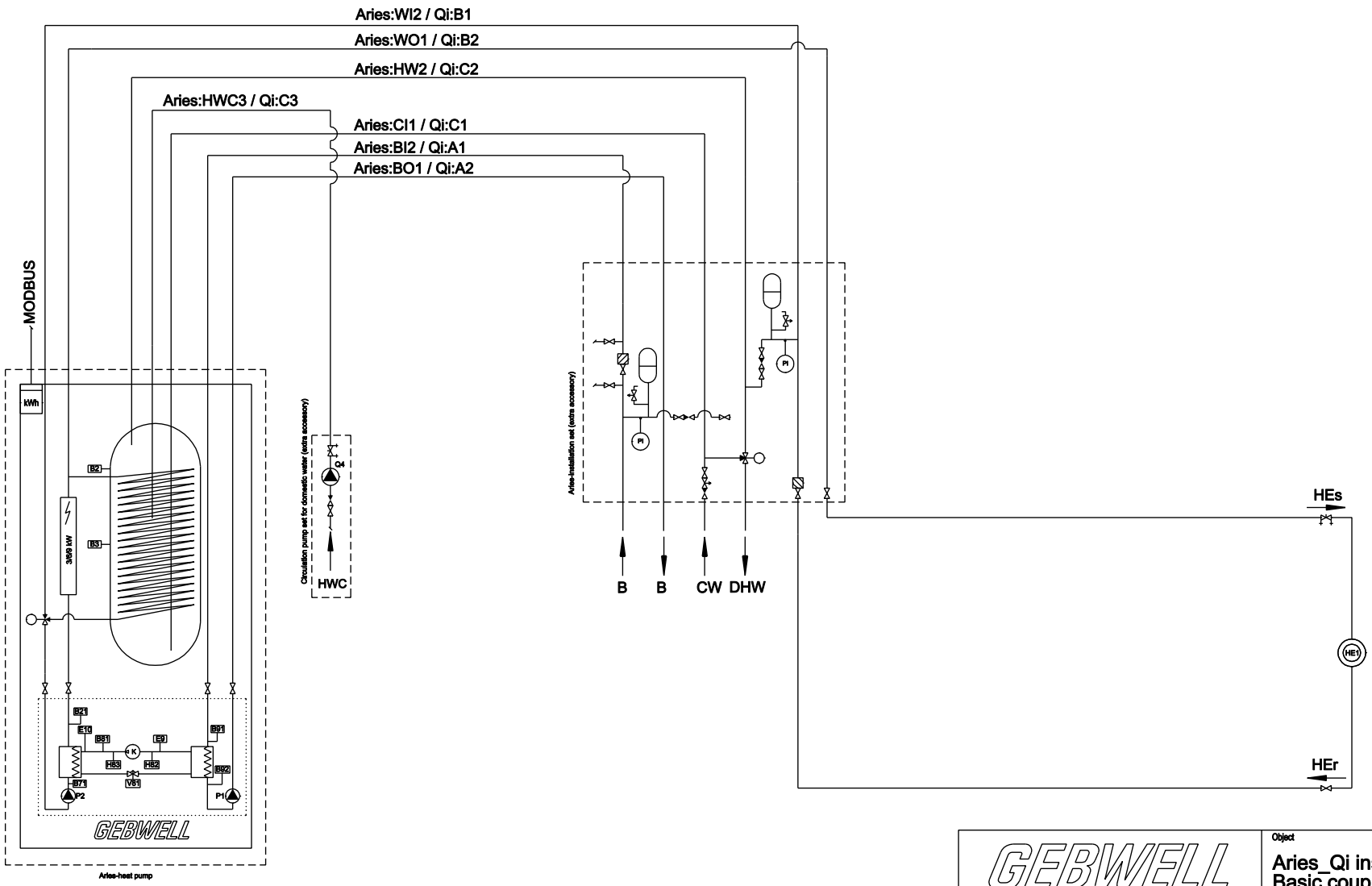

NOTE!
Pipe-size and electrical markings in the diagram are indicative.
The pressure loss in the dimensioning max 5 kPa.
Pipe sizes, flow and components must be checked from the planning documents.
Power supply for all circulation pumps from the distribution cabinet, eg the brine pump in the standard delivery of the heat pump, Check pump-specific breaker devices.
Power supply for electric heaters from optional contactor box or distribution cabinet.
Check electical details of heatpumps from installation-, service- and user manual
Gebwell-products are circled in diagram.
Please check delivery content form your salesperson!

GEBWELL
Heating solutions

Designer: Gebwell	Date: 27.2.2020		
Checked	Date		
Accepted	Date		

Object
Aries_Qi installation set
Basic coupling

Purpose
SCHEMA

Drawing number

Revision

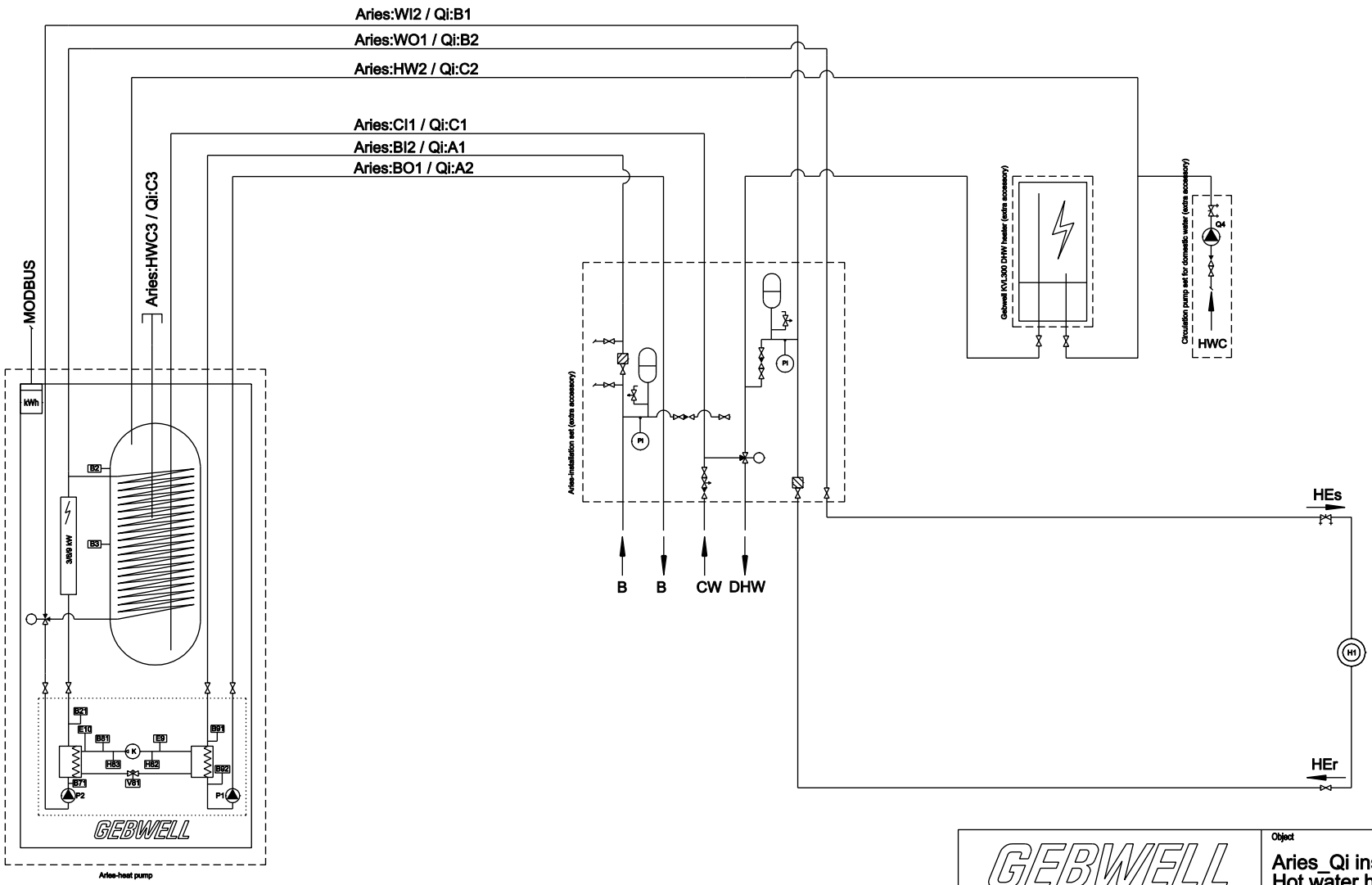

NOTE!
Pipe-size and electrical markings in the diagram are indicative.
The pressure loss in the dimensioning max 5 kPa.
Pipe sizes, flow and components must be checked from the planning documents.
Power supply for all circulation pumps from the distribution cabinet, eg the brine pump in the standard delivery of the heat pump, Check pump-specific breaker devices.
Power supply for electric heaters from optional contactor box or distribution cabinet.
Check electical details of heatpumps from installation-, service- and user manual
Gebwell-products are circled in diagram.
Please check delivery content form your salesperson!

GEBWELL
Heating solutions

Designer: Gebwell	Date: 27.2.2020	
Checked	Date	
Accepted	Date	

Object
Aries_Qi installation set
Hot water heater KVL300

Purpose
SCHEMA

Drawing number

Revision

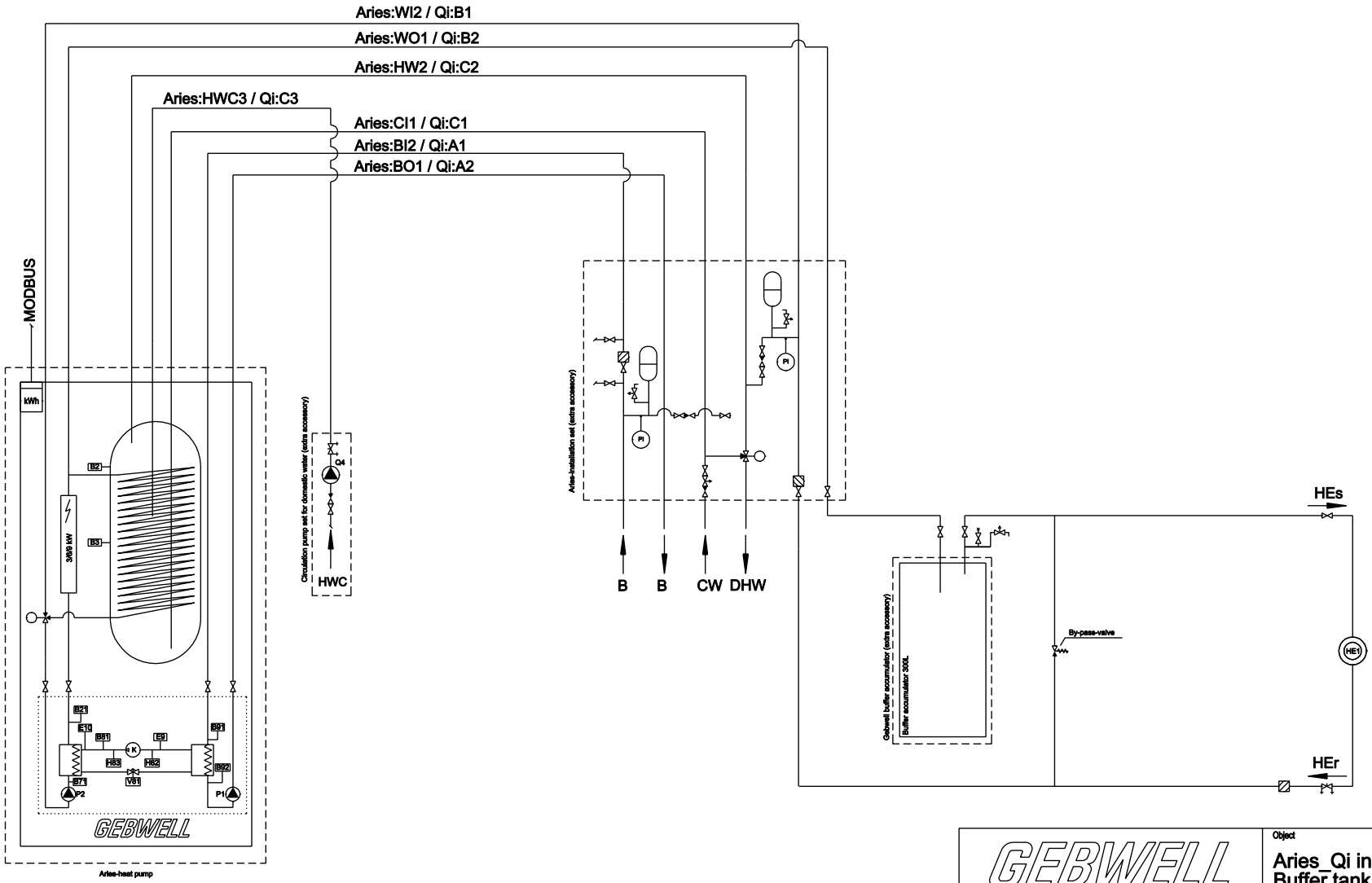

NOTE!
Pipe-size and electrical markings in the diagram are indicative.
The pressure loss in the dimensioning max 5 kPa.
Pipe sizes, flow and components must be checked from the planning documents.
Power supply for all circulation pumps from the distribution cabinet, eg the brine pump in the standard delivery of the heat pump, Check pump-specific breaker devices.
Power supply for electric heaters from optional contactor box or distribution cabinet.
Check electical details of heatpumps from Installation-, service- and user manual
Gebwell-products are circled in diagram.
Please check delivery content form your salesperson!

GEBWELL
Heating solutions

Designer	Date	Object	
Gebwell	27.2.2020	Aries_Qi installation set Buffer tank 300L	
Checked	Date	Purpose SCHEMA	
Accepted	Date	Drawing number	Revision

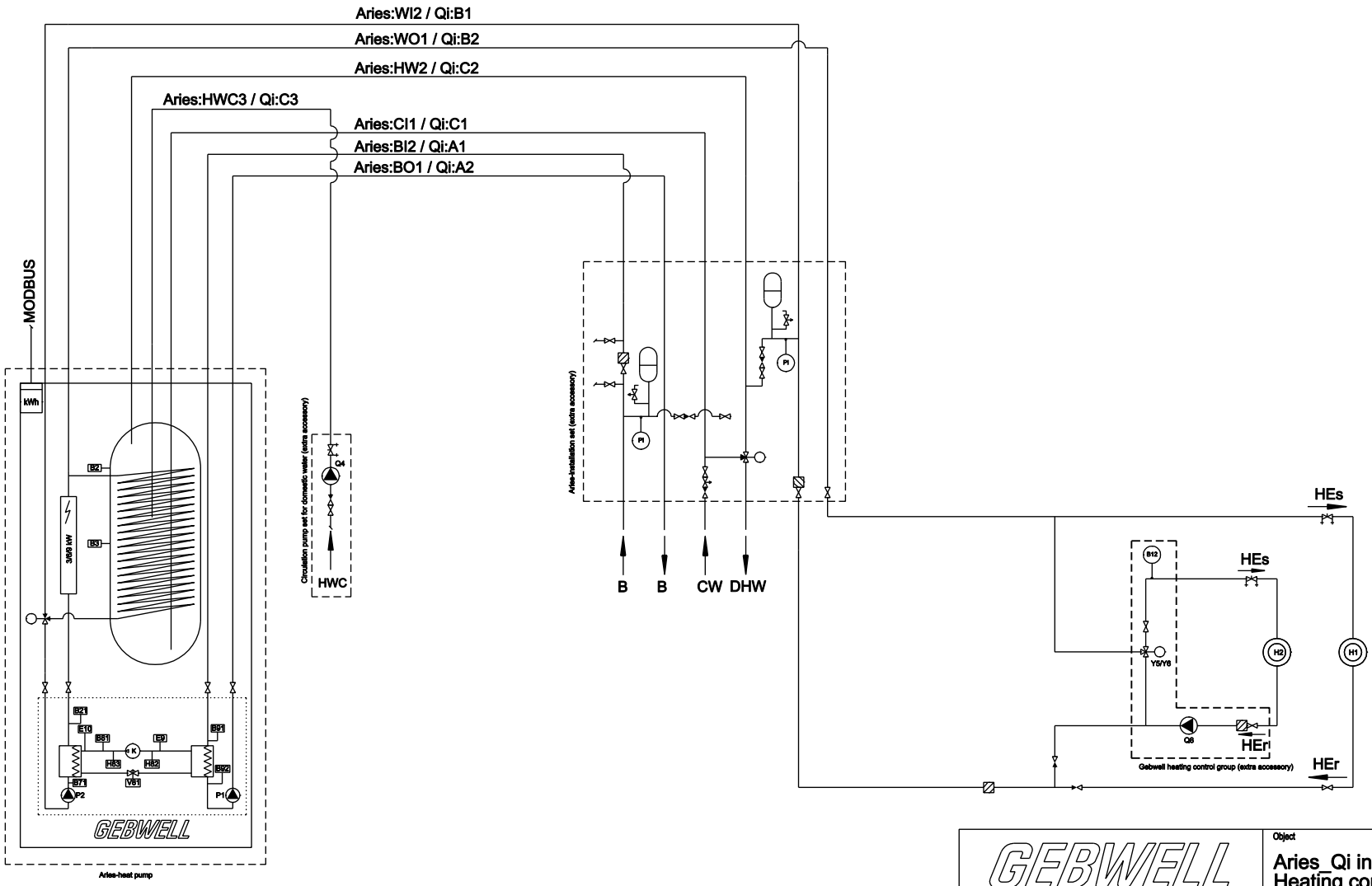

NOTE!
Pipe-size and electrical markings in the diagram are indicative.
The pressure loss in the dimensioning max 5 kPa.
Pipe sizes, flow and components must be checked from the planning documents.
Power supply for all circulation pumps from the distribution cabinet, eg the brine pump in the standard delivery of the heat pump, Check pump-specific breaker devices.
Power supply for electric heaters from optional contactor box or distribution cabinet.
Check electical details of heatpumps from installation-, service- and user manual
Gebwell-products are circled in diagram.
Please check delivery content form your salesperson!

GEBWELL
Heating solutions

Designer: Gebwell	Date: 27.2.2020	
Checked	Date	
Accepted	Date	

Object
Aries_Qi installation set
Heating control group

Purpose
SCHEMA

Drawing number

Revision

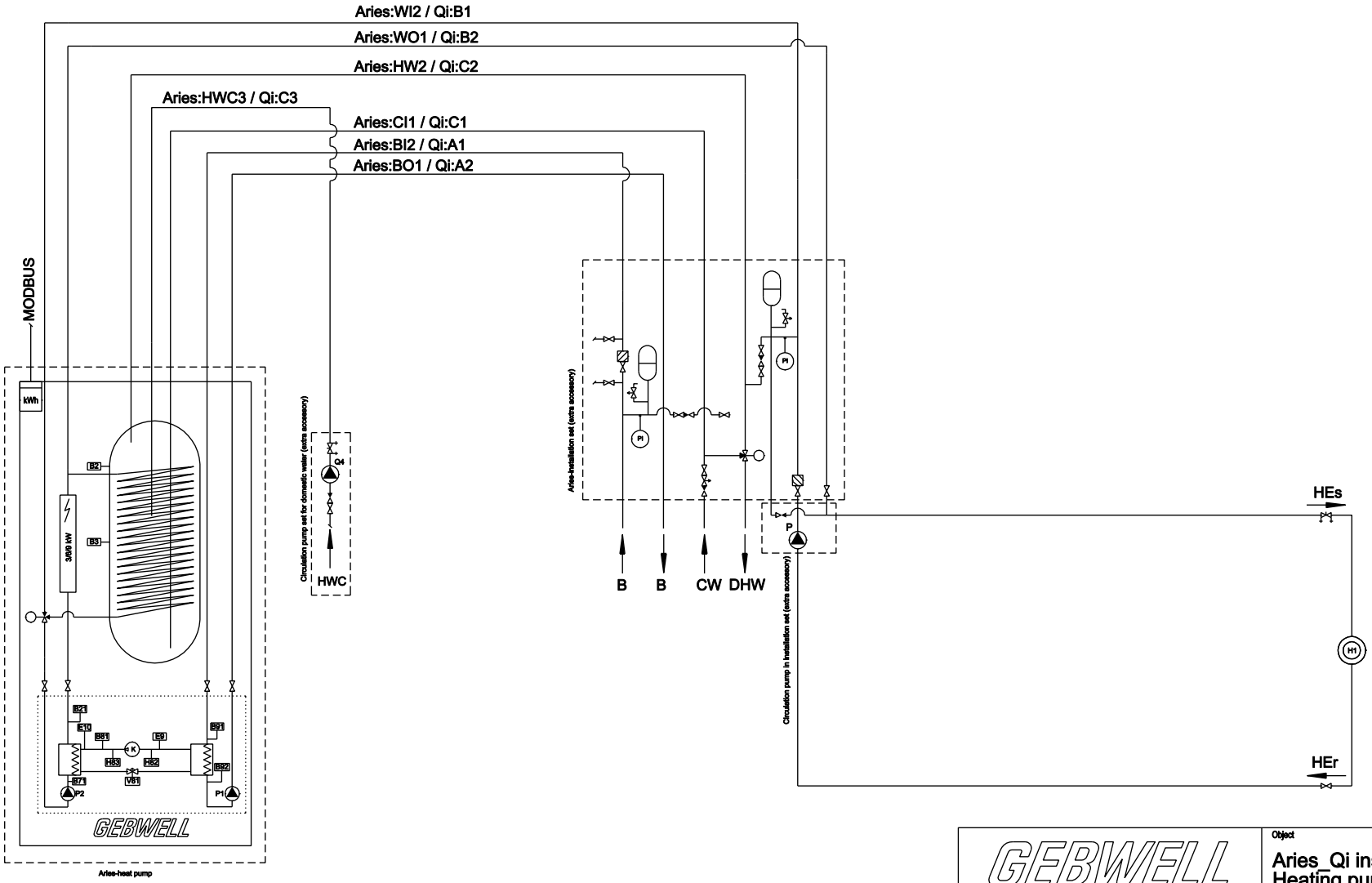

NOTE!
Pipe-size and electrical markings in the diagram are indicative.
The pressure loss in the dimensioning max 5 kPa.
Pipe sizes, flow and components must be checked from the planning documents.
Power supply for all circulation pumps from the distribution cabinet, eg the brine pump in the standard delivery of the heat pump, Check pump-specific breaker devices.
Power supply for electric heaters from optional contactor box or distribution cabinet.
Check electical details of heatpumps from installation-, service- and user manual
Gebwell-products are circled in diagram.
Please check delivery content form your salesperson!

GEBWELL
Heating solutions

Designer: Gebwell	Date: 27.2.2020	
Checked	Date	
Accepted	Date	

Object
Aries_Qi installation set
Heating pump extension

Purpose
SCHEMA

Drawing number

Revision

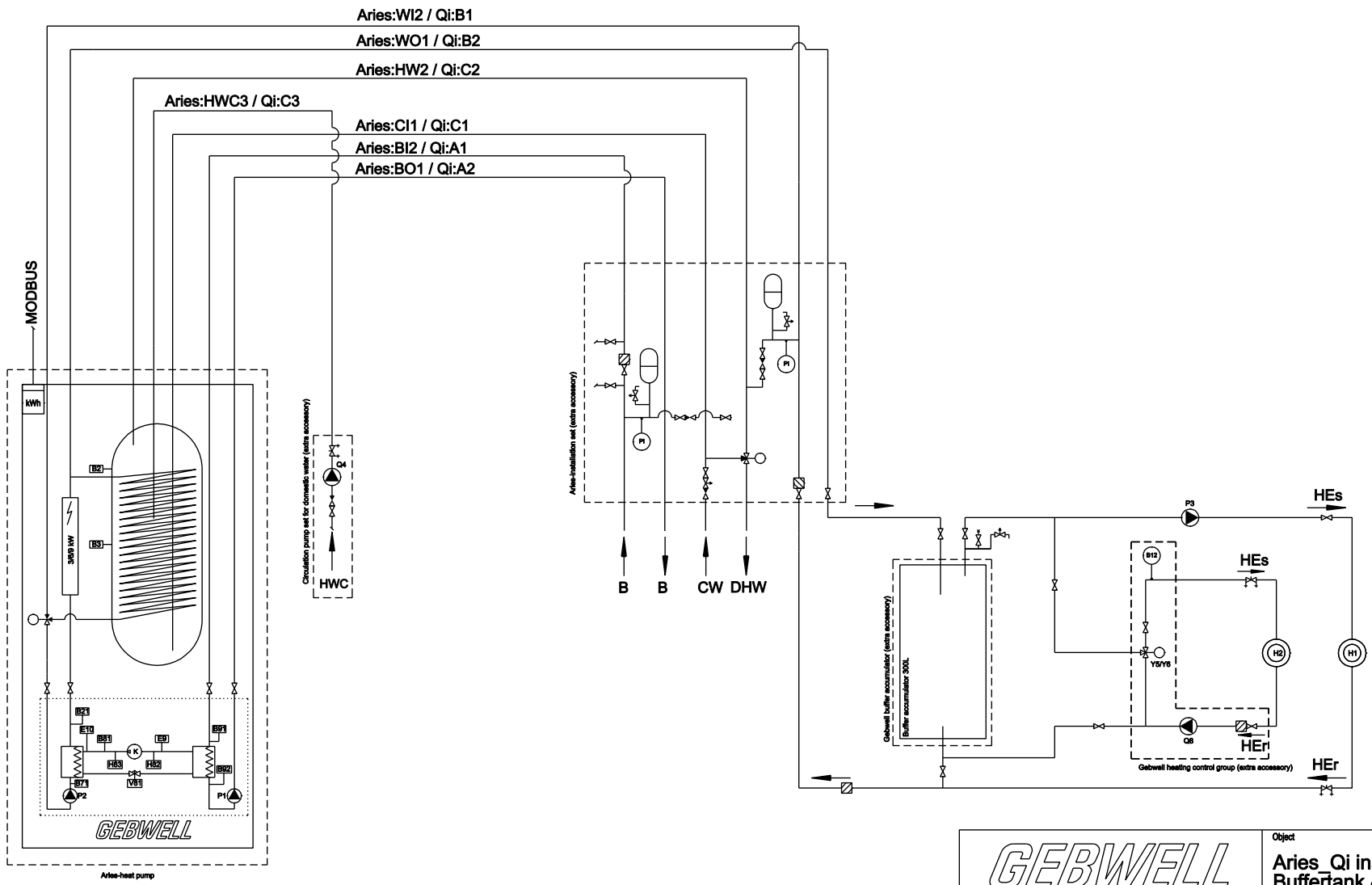

NOTE!
Pipe-size and electrical markings in the diagram are indicative.
The pressure loss in the dimensioning max 5 kPa.
Pipe sizes, flow and components must be checked from the planning documents.
Power supply for all circulation pumps from the distribution cabinet, eg the brine pump in the standard delivery of the heat pump, Check pump-specific breaker devices.
Power supply for electric heaters from optional contactor box or distribution cabinet.
Check electical details of heatpumps from installation-, service- and user manual
Gebwell-products are circled in diagram.
Please check delivery content form your salesperson!

GEBWELL
Heating solutions

Designer	Date	Gebwell 27.2.2020
Checked	Date	
Accepted	Date	

Object
Aries_Qi installation set Buffertank & heating control group

Purpose
SCHEMA

Drawing number

Revision

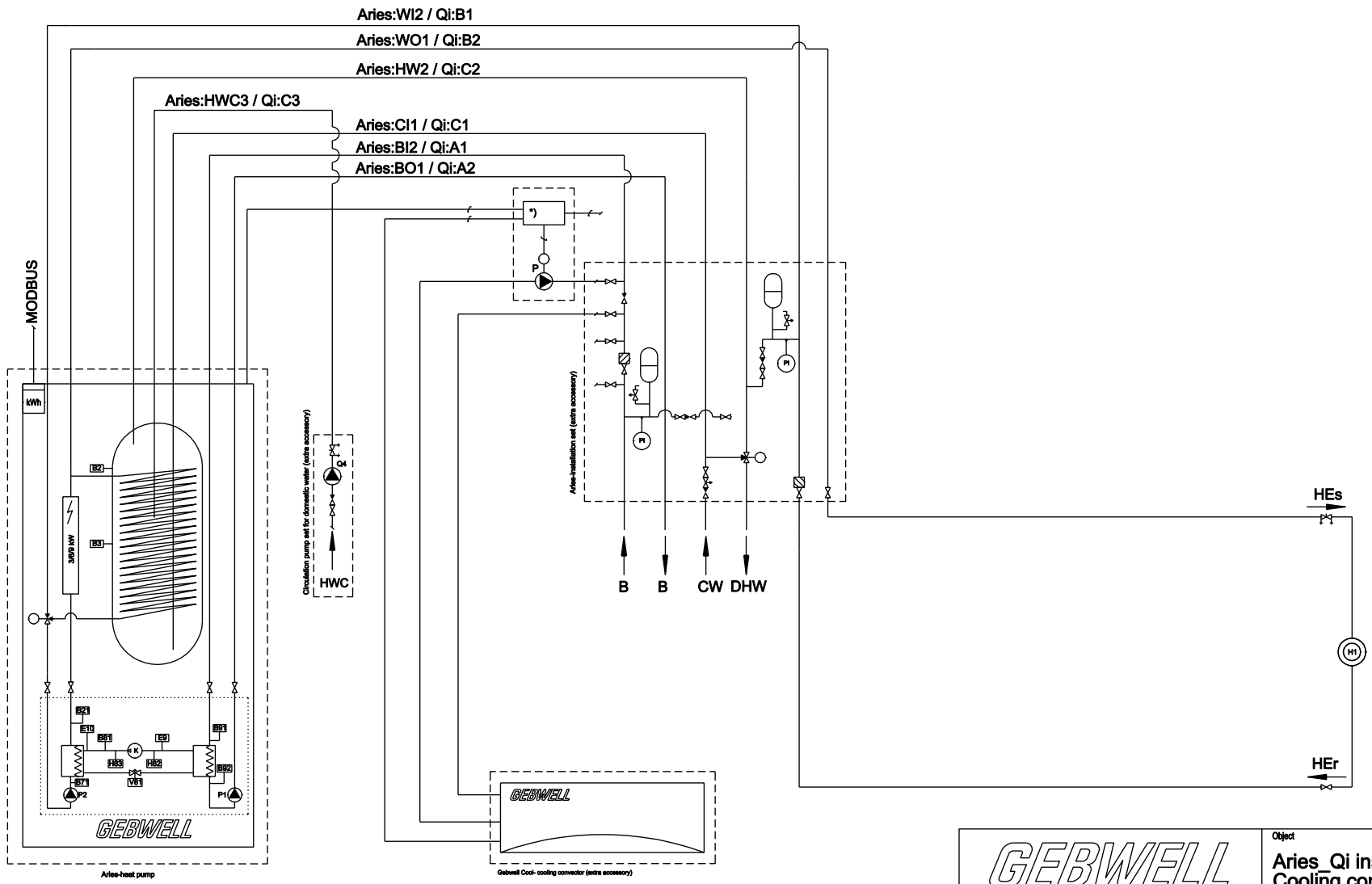

NOTE!
Pipe-size and electrical markings in the diagram are indicative.
The pressure loss in the dimensioning max 5 kPa.
Pipe sizes, flow and components must be checked from the planning documents.
Power supply for all circulation pumps from the distribution cabinet, eg the brine pump in the standard delivery of the heat pump, Check pump-specific breaker devices.
Power supply for electric heaters from optional contactor box or distribution cabinet.
Check electical details of heatpumps from installation-, service- and user manual
Gebwell-products are circled in diagram.
Please check delivery content form your salesperson!

GEBWELL
Heating solutions

Designer Gebwell	Date 19.8.2019		
Checked	Date		
Accepted	Date		

Object
Aries_Qi installation set
Cooling convector

Purpose
SCHEMA

Drawing number

Revision

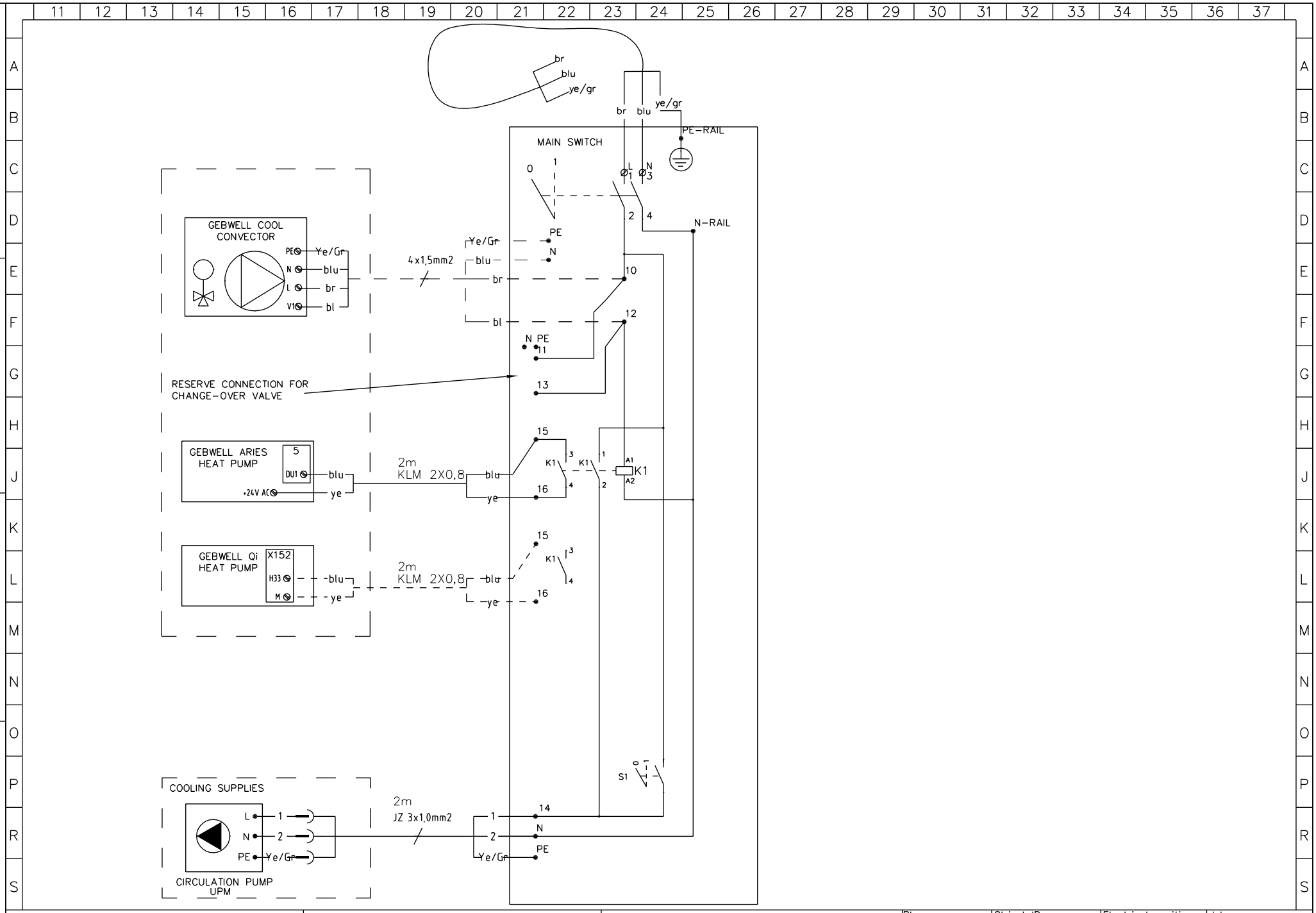

GEBWELL

PB_ASPVIIL
CIRCUIT DIAGRAM

Plan. /28.2.2020	Object ID	Electrical position	Job no.
Draw. VHe	Sheet 2/2	Drawing no.	
Check			

D rev
E rev
F rev
A rev
B Rev.
C Rev.

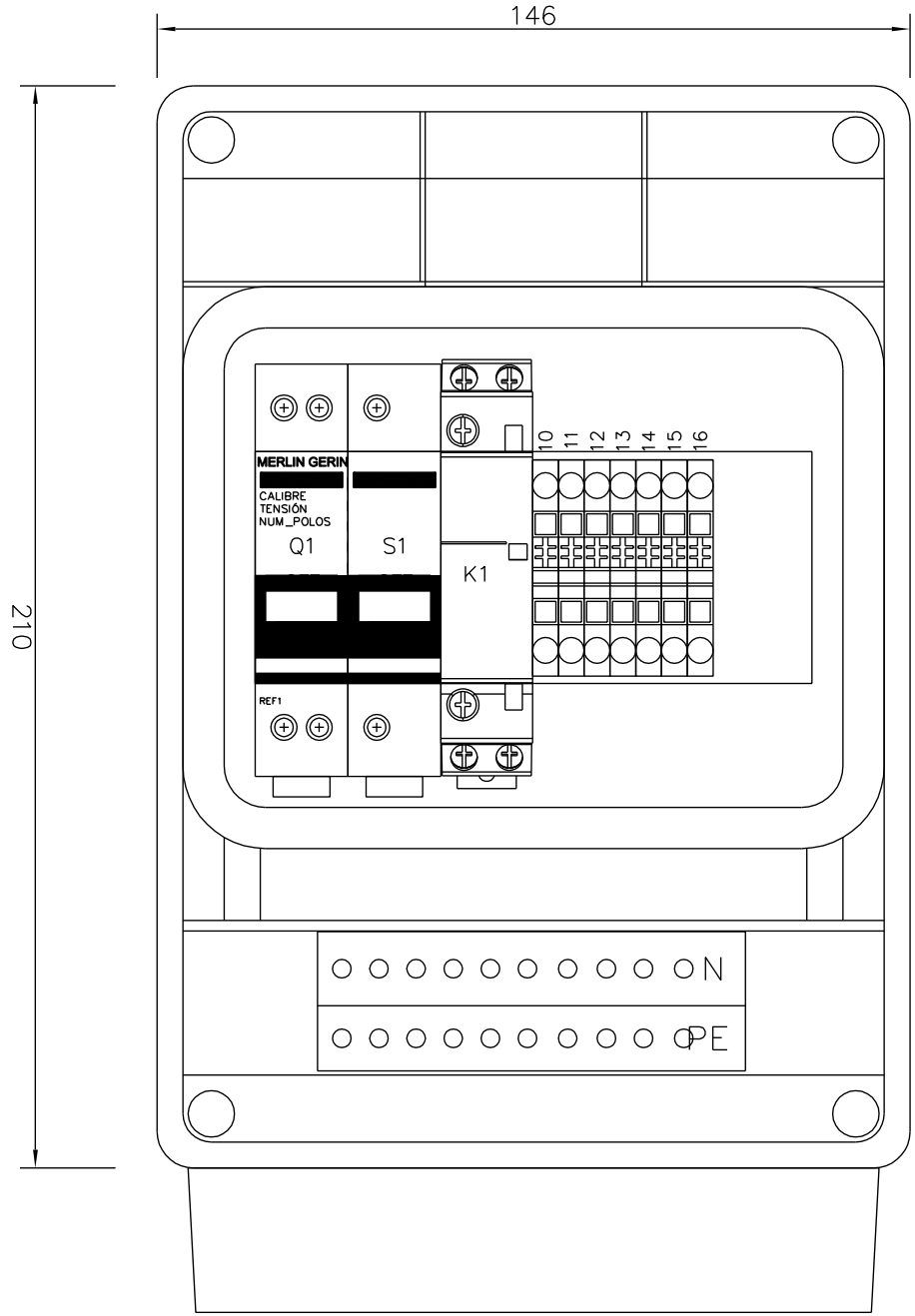

MAIN SWITCH I 0	PUMP SWITCH MAN AUTO	PUMP CONTACTOR			
Q1	S1	K1			

NAME	CODE	TYPE	MANUFACTURER	PCS
MAIN SWITCH	Q1	2P 20A 415V	SCHNEIDER	1
SUPPLY CABLE		JB 3X1,5	–	4
SWITCH 1 0	S1	1P	SCHNEIDER	1
TERMINAL	10–16	UT2.5	PHOENIX	5
CONTACTOR	K1	25A 2s 230VAC	SCHNEIDER	1
CABINET		1506	Hensel	1

TECHNICAL DETAILS

1. VOLTAGE Un 240 V
2. CURRENT In 10 A
3. CONTROL VOLTAGE U 240 V
4. IP–CLASS IP 54
5. MAX. TEMPERATURE 35°C

GEBWELL

PB_ASPVIIL
LAYOUT

Plan. /28.2.2020	Object ID	Electrical position	Job no.
Draw. VHe	Sheet 1/2	Drawing no.	
Check			

D rev
E rev
F rev
A rev
B Rev.
C Rev.

GEBWELL

Vaatimustenmukaisuusvakuutus
Declaration of Conformity
Försäkran om överensstämmelse

Gebwell Oy vakuuttaa omalla vastuullaan, että tuotteet
We, Gebwell Ltd, hereby declare under our sole responsibility that the product
Gebwell Ab försäkrar under eget ansvar att de produkter

VV Exchange valve sets
GEB Manifold cabinets
MPVR Collector valve sets
ASP Installation sets
LSR Heating control groups
PUM Pump heating groups
LVS DHW shunts
LVKMLP Hot water circulation sets
JSIIR Cooling heat exchangers
ETAYHT Smart web data connections
ENEM, HA1, JPLP, KPAKO, LSJ, LVL, LVSKOTELO, MODBUS Heat pump controller accessories
GES Resistor control centres

joita tämä vakuutus koskee, on seuraavien direktiivien ja asetusten mukainen
to which this declaration relates is in conformity with the
som omfattas av denna försäkran är i överensstämmelse med följande direktiv

ELECTROMAGNETIC COMPATIBILITY (EMC) DIRECTIVE 2014/30/EU
LOW VOLTAGE DIRECTIVE (LVD) 2014/35/EU
ECO-DESIGN REQUIREMENTS FOR ENERGY-RELATED PRODUCTS DIRECTIVE 2009/125/EC
RESTRICTION OF THE USE OF HAZARDOUS SUBSTANCES DIRECTIVE (RoHS II): 2011/65/EU
REGULATION (EU) 2017/1369 ON ENERGY LABELLING
(Pressure Equipment Directive (PED) 2014/68/EU shall not apply to this pressurized equipment according to item 2.f.iii in Article 1.)

ja seuraavia yhdenmukaistettuja standardeja ja teknisiä eritelmiä on sovellettu:
and the following harmonised standards and technical specifications have been applied:
och följande harmoniserade standarder och tekniska specifikationer har tillämpats:

LVD:	EN 61439-1:2011
	EN 61439-2:2011
	EN 61439-3:2012
EMCD:	EN 61439-1 Annex J, Point J.9.4.2
HD:	60364 Low-voltage electrical installations
	384 Electrical installations of buildings
	EN 14511

Commission Regulation (EU) No 813/2013 on eco design of space heaters and combination heaters
Commission Delegated Regulation (EU) No 811/2013 on energy labelling of space heaters and combination heaters.

Tuotteilla on CE-vaatimuksenmukaisuusmerkintä.
Products are provided with a CE marking of conformity.
Produkterna är försedda med CE-märkning av överensstämmelse.

Leppävirta 30.10.2019

Tuure Stenberg
Managing Director

Gebwell Ltd. | Patruunapolku 5, FI-79100 Leppävirta, FINLAND | Tel. +358 20 1230 800 | info@gebwell.fi | www.gebwell.fi

Gebwell Oy (2008956-7)
Patruunapolku 5, 79100 Leppävirta
puh 020 1230 800 | info@gebwell.fi | www.gebwell.fi

TEHTY SUOMESSA
PRODUCERAD I FINLAND