GEBWELL

Installation and Commissioning Manual

Gebwell G-Eco Pro 120 & Pro 120 HT

WWW.GEBWELL.COM

1.2. - 2.07.26

Congratulations on an excellent choice!

You have chosen an environmentally friendly heat pump that uses a natural refrigerant. This choice not only improves the energy efficiency of your property but also helps to protect the environment. Thank you for joining us in making the world a greener place!

© 2025 GEBWELL LTD
Leppävirta, Finland
All rights reserved

Contents

1 General ... 3

1.1 Device information and storage of the manual ... 3

1.2 Installation record ... 4

1.3 Device registration ... 5

1.4 Standards and regulations ... 6

2 Safety ... 7

2.1 Safety symbols ... 7

2.2 Flammable refrigerant ... 8

2.3 Safety functions ... 9

2.3.1 Ventilation air extractor ... 9

2.3.2 Differential pressure transmitter ... 9

2.3.3 Refrigerant leak detector ... 10

2.3.4 Hazardous substances ... 11

3 Introduction to the heat pump ... 12

3.1 Heat pump system ... 12

3.2 Operating principle of a heat pump ... 12

3.3 Heating functions ... 15

3.4 Tips for making savings ... 16

3.5 Heat pump's components and sensors ... 18

4 Delivery and handling ... 21

4.1 Content of the delivery ... 21

4.2 Standard equipment ... 21

4.3 Optional accessories ... 22

4.4 Storage ... 22

4.5 Recycling ... 22

5 Installing the heat pump ... 23

5.1 Transporting the heat pump ... 24

5.2 Removing the heat pump package ... 26

5.3 Removing the transport support from compressor unit ... 27

5.4 Heat pump placement ... 28

5.5 Installing the ventilation air extractor ... 32

5.6 Removing and replacing the housing panels ... 35

6 Pipe installations ... 37

6.1 Protection of indirect circuits ... 41

6.2 Brine circuit ... 42

6.3 Heat conduction circuit ... 45

© 2025 Gebwell

6.4 Domestic hot water system ... 48
6.5 Refrigerant safety valve ... 48
7 Electrical connections ... 49
7.1 Connecting the power supply ... 52
7.2 Connecting external circulation pumps ... 53
7.3 Building a LAN ... 54
7.4 Connecting a cascade system ... 55
7.5 Connecting the heat pump to a building automation system ... 55
7.6 Domestic hot water accessories ... 56
7.7 Connecting the ventilation air extractor ... 57
8 Starting up the heat pump ... 58
8.1 Filling and venting ... 58
8.2 Checks before starting up the heat pump ... 60
8.3 Hardware configuration ... 61
8.4 Starting the heat pump for the first time ... 61
9 Heat pump settings ... 62
9.1 Controller user interface ... 62
9.2 Basic heat pump settings ... 62
9.3 Domestic hot water system settings ... 63
9.4 Heating circuit settings ... 64
9.5 Cooling circuit settings ... 67
9.6 Charge circuit settings ... 68
9.7 Brine circuit settings ... 69
9.8 Settings to prevent the collector from freezing ... 70
9.9 Cascade system operation ... 70
9.10 Additional/reserve heat sources and settings ... 71
9.11 Connection to a building automation system ... 72
9.12 Heat pump control by an external automation system ... 73
9.12.1 Independent heating/cooling producer ... 73
9.12.2 System ... 74
10 Heat pump maintenance and servicing ... 76
10.1 Annual inspections ... 77
10.2 Personal protective equipment and tools ... 78
10.3 Draining the cooling circuit ... 79
11 Malfunctions and alerts ... 80
11.1 Troubleshooting ... 80
12 Technical specifications G-Eco Pro 120 ... 82
12.1 Technical specifications G-Eco Pro 120 HT ... 84

© 2025 Gebwell

12.2 Range of operation G-Eco Pro 120 87
12.3 Range of operation G-Eco Pro 120 HT 87
12.4 Performance value graphs G-Eco Pro 120 88
12.5 Performace value graphs G-Eco Pro 120 HT 89
13 Modbus registers 91
14 Electrical diagrams 105
15 Declaration of conformity 106

© 2025 Gebwell

Copyright

Copyright © 2025 Gebwell Ltd. All rights reserved.

The copyright to this publication is owned by Gebwell. Translating or reproducing the publication in part or in full is only permitted with permission from Gebwell Ltd. The original language of the publication is Finnish.

Disclaimer

- The material in this manual is for informational purposes only.
- Gebwell Ltd reserves the right to modify products to improve their reliability, function, design or other characteristics without prior notice. Gebwell Ltd shall not be liable for damage, loss, costs or expenses arising out of or in connection with the use of this manual or the products covered by it.
- Gebwell Ltd makes no express or implied warranties with respect to this manual, including, but not limited to, implied warranties of suitability for trading or fitness for a particular purpose.

© 2025 Gebwell

1 General

1.1 Device information and storage of the manual

Keep the user instructions in the immediate vicinity of the device.

Read the instructions carefully before installing, adjusting or servicing the device. Follow the instructions. **Observe the special safety instructions for the R290 refrigerant.**

Fill in the details below. If there are problems with the device, these details must be available. The heat pump's serial number is required for all service and support calls. It is on the rating plate near the control panel.

Heat pump model:	Serial number:
Installation firm:	Name:
Installation date:	Phone:
Electrician:	Name:
Installation date:	Phone:

The CE mark is the manufacturer's declaration that the product conforms to EU legal requirements. Gebwell Ltd affirms that the product meets all of the requirements of relevant EU directives. The purpose of the CE mark is to facilitate the free movement of goods on the internal market in Europe.

1.2 Installation record

The heating system must be inspected in accordance with the applicable regulations before commissioning. The inspection must be performed by a qualified person.

Complete the installation record with care. The installation record is appended to this manual.

A completed installation record is a precondition for the validity of the manufacturer's warranty.

Mark on the label affixed to the heat pump's control panel:

- The commissioning date of the refrigeration device
- The deadline for the first annual servicing

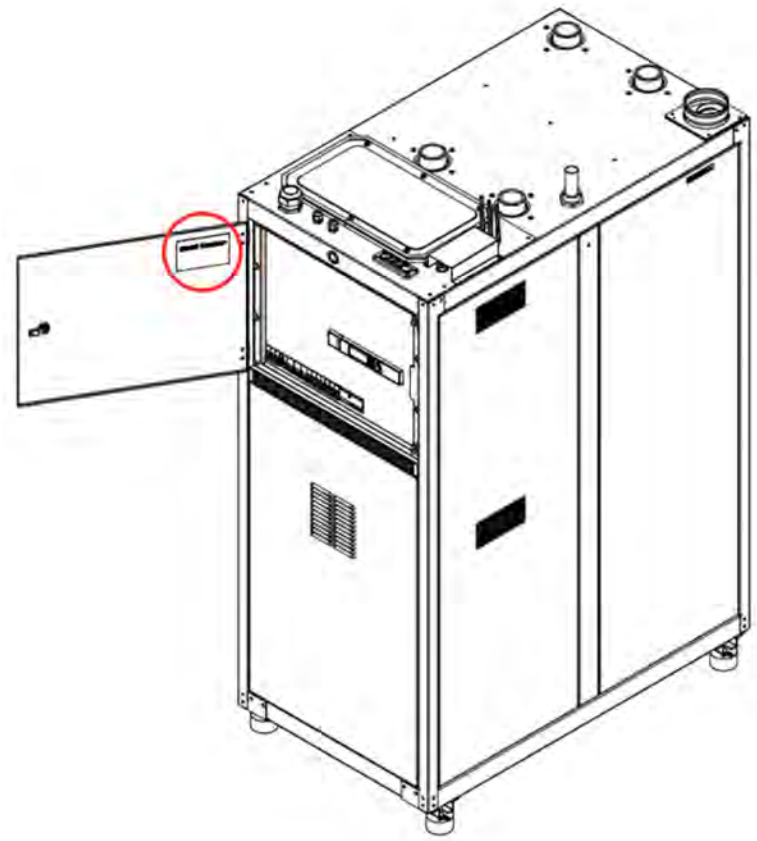

Figure 1.1 Control centre label

1.3 Device registration

After commissioning, the heat pump sends telemetry data to the Gebwell Smart cloud automatically. Data storage in the cloud enables the display of the device's history data in the Gebwell Smart Hub service and the optimisation of the system. The data may also be used for technical support and product development.

Register the heat pump you have installed on our website at

https://hub.gebwell.fi/register-heatpump/fi.

You can also access the registration page on a smartphone by using the QR code below. If you are unable to register the heat pump, call Gebwell Ltd on +358 20 1230 800.

Gebwell Ltd. contact information

Gebwell Oy (Business ID 2008956-7)

Patruunapolku 5, FI-79100 Leppävirta, Finland

Tel. +358 20 1230 800 | info@gebwell.fi | www.gebwell.fi

1.4 Standards and regulations

The installation work must comply with the following:

- National regulations
- Statutory accident prevention regulations
- Statutory environmental protection provisions
- Specific safety regulations for the professional field

2 Safety

2.1 Safety symbols

This manual contains danger, warning, caution and notice symbols. They inform the user or an authorised service representative of potential harm to the product or persons.

A dangerous situation is one in which there is a risk of personal injury. All deviating usage is forbidden, including failure to observe the safety information.

Review the safety notes for each work phase in the relevant work phase section.

DANGER indicates an immediate hazard that will result in death or serious injury.

CAUTION indicates a potential hazard that could result in minor or moderately serious injury.

WARNING indicates a potential hazard that could result in death or serious injury.

NOTICE indicates a potential situation that could result in property damage or an adverse outcome or condition.

COMMENT indicates information intended to clarify or simplify the procedure.

2.2 Flammable refrigerant

Gebwell G-Eco - heat pumps contain R290 refrigerant, which is classified as a class A3 flammable substance.

The special safety instructions for flammable substances must be followed during installation, operation and maintenance to prevent the risk of ignition and refrigerant leaks. However, thanks to the device's safety mechanisms, the risk of leaks is very limited. This requires that the equipment is installed and operated in accordance with the instructions. The Gebwell G-Eco - heat pump itself does not cause a zone classification to be assigned to the operating premises. Note that pressure testing and flushing may only be performed with nitrogen.

Due to its low flash point, it is particularly important to analyse and eliminate potential sources of ignition before starting maintenance and installation work. Sources of ignition may include open flames, hot surfaces and mechanical sparks, as well as static electricity—for example, on clothing. Check and analyse ignition sources with care before starting work.

© 2025 Gebwell

2.3 Safety functions

2.3.1 Ventilation air extractor

The heat pump has ventilation via an external air extractor. The purpose of ventilation is to prevent flammable gas mixtures from forming in the operating area of the heat pumps. The heat pump must not be operated without a ventilation air extractor under any circumstances. In addition, the ventilation cools the machine space and creates negative pressure in the refrigeration machine room. The device cannot be used without negative pressure in the cooling module. The ventilation air extractor has three modes that activate according to the operating conditions.

Controlling the ventilation air extractor

NORMAL

The heat pump's automated Pi adjustment strives to maintain 10 Pa of negative pressure.

BOOST - Temperature control

When the temperature inside the enclosure rises above 40°C, BOOST-mode activates, and the automation system speeds up the extractor until the temperature returns to normal.

SAFETY

In the event of a refrigerant leak, the heat pump's automation system raises the extractor power to 100%, increasing the ventilation flow above the required Q_{min} and at least 20 Pa of negative pressure.

It is especially important to ensure that the ventilation is dimensioned correctly, that it works and that the vent is in a place where there are no potential hazards. Inspect the ventilation system before commissioning the device. The owner of the device is responsible for ensuring the adequacy of the ventilation system. For more information, see section **5.5 Installing the ventilation air extractor**. Note that negative-pressure ventilation must be active before commissioning the device.

Ensure the ventilation is designed in accordance with the instructions in **section 5.5,** so that the minimum ventilation flow value (Q_{min}) can be realised in **SAFETY**-mode.

Pay special attention to ensuring a sufficient volume of fresh air. The volume can be adjusted using the control valve located inside the lower front panel of the device. If fresh air is drawn from the installation area, ensure that there is sufficient fresh air in the area.

The fresh air vent has a filter. The filter should be replaced at least once a year during maintenance. If the filter becomes more dirty than normal, it should be replaced more frequently.

R290 refrigerant is heavier than air. Therefore, in the event of a leak, it accumulates in the heat pump's bottom tray, where the end of the ventilation duct is located. When you position the output pipe from the ventilation duct, make sure the venting of extraction air does not pose an environmental hazard. There should be no ground-level spaces near the pipe, and the pipe must not be positioned near places where gas could accumulate, such as rainwater wells. See sections **5.4 Heat pump placement** and **5.5 Installing the ventilation air extractor** for more information about the location of the device and an example installation of an extraction air vent.

2.3.2 Differential pressure transmitter

The heat pump comes with a differential pressure sensor as standard to ensure that the machine space remains at the permitted negative pressure. The heat pump shuts down if the negative pressure exceeds the limit values.

The machine shuts down/does not start if the panels covering the machine space are opened.

2.3.3 Refrigerant leak detector

The heat pump comes equipped with **a refrigerant leak detector** as standard. The heat pump's automation system monitors the operation of the leak detector. When the refrigerant concentration exceeds the leak alarm threshold, the compressor shuts down, a high-priority alarm is triggered, and the extraction fan switches to SAFETY mode. Once SAFETY mode is activated, the gas concentration within the heat pump's area of influence is non-flammable. In the event of a refrigerant leak alarm, there is no danger to the property or the user. SAFETY mode must be manually reset from the heat pump controller.

© 2025 Gebwell

2.3.4 Hazardous substances

Refrigerant

The heat pump contains low flash point (A3) refrigerant. The refrigerant is in a sealed refrigerant circuit in the compressor module. Gebwell G-Eco heat pumps do not cause a zone classification to be assigned to the installation premises.

The refrigerant circuits in the heat pumps feature very low (-25°C) and very high (+130°C) temperatures. Working inside the heat pump can lead to frost and burn injuries.

If the device detects a refrigerant leak, ensure that the reserve heat mode is active and contact a service provider immediately

Only nitrogen should be used to pressure-test the refrigerant circuit.

Any work on the refrigerant circuit may only be carried out by persons qualified in the refrigeration sector.

The device should not use any refrigerant other than the one intended for it. The refrigerant type is stated on the rating plate and in the technical table in the instructions.

Heat collecting liquid

The mixture of freeze-protection agents, including ethanol, used as the heat collecting liquid is highly flammable. Avoid splashing the liquid on your skin.

Compressor oil

The oils used in the compressor are toxic and can cause cancer.

3 Introduction to the heat pump

3.1 Heat pump system

The heat pump system is well designed and correctly dimensioned, with low operating costs and good energy efficiency. The heat pump enables you to efficiently heat your building and domestic water.

The heat pump collects thermal energy from the heat source and transfers it inside the building. Examples of heat sources include ground source heat wells, water systems, soil, ventilation and waste heat processes.

In the summer, the temperature of the cold collector liquid from the heat source can also be used to cool the building in an environmentally friendly way.

Further information about heat collection systems and their dimensions can be found on the websites of Gebwell Oy and the Finnish Heat Pump Association (SULPU).

www.sulpu.fi

www.gebwell.fi/en/

3.2 Operating principle of a heat pump

The heat pump has four main components (**Figure**):

- Evaporator
- Compressor
- Condenser
- Expansion valve

Solar heat stored in the soil is collected by a brine circulating in the collector pipe. The evaporator (4) transfers the energy contained in the collector fluid to the refrigerant, which absorbs the heat energy as it evaporates. The collector fluid returns to the ground approximately 3°C cooler than when it came out. The brine entering the heat pump can be no colder than -5°C.

The pressure and temperature of the refrigerant increase in the compressor (3). The refrigerant also absorbs the heat energy created by the compressor's work.

The hot gas enters the condenser (2). The condenser transfers the heat energy from the refrigerant into the water circulating in the heating system, which distributes it to heat the building and the domestic water with the help of a change-over valve. The refrigerant condenses into a liquid state in the condenser as it loses heat energy.

© 2025 Gebwell

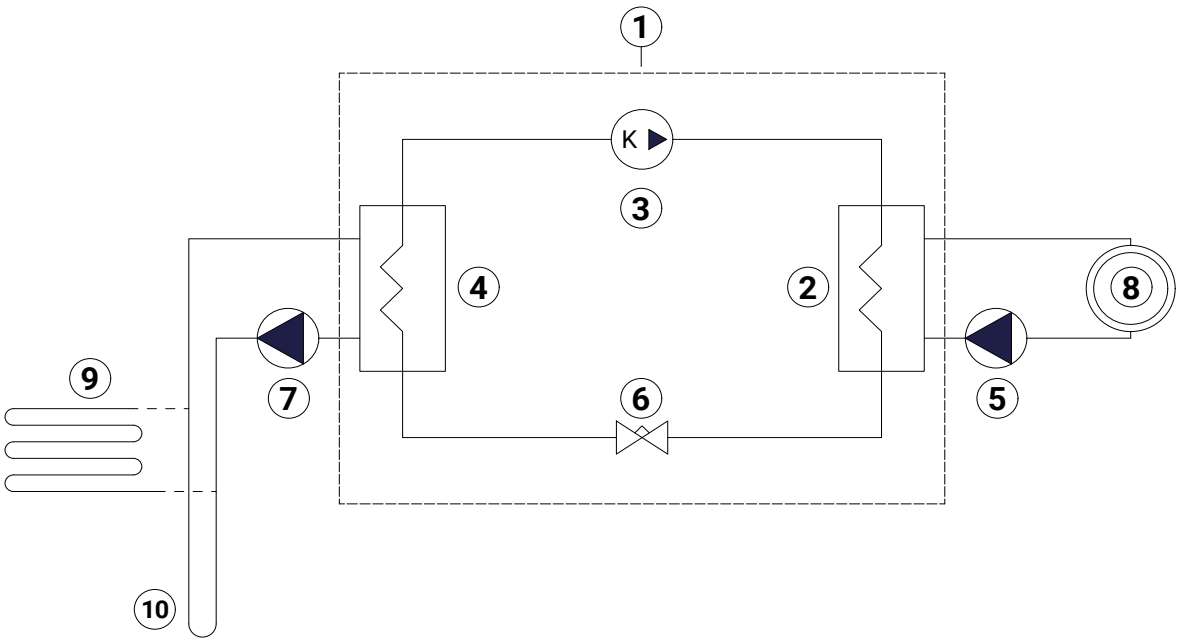

Figure 3.1 Diagram of a general heat pump model

1	Heat pump	6	Expansion valve
2	Condenser	7	Source pump
3	Compressor	8	Heating circuit
4	Evaporator	9	Surface brine circuit
5	Charge pump	10	Energy well

The pressure of the refrigerant remains high as the liquid refrigerant is transferred to the expansion valve (6). The pressure of the refrigerant decreases in the expansion valve, causing its temperature to drop to approximately -10°C. The expansion valve injects the correct amount of refrigerant into the evaporator, where the heat energy transferred from the collector fluid causes the refrigerant to evaporate.

The heat pump has a built-in automation system (the controller) that controls the device's operation and safety functions. The compressor, internal circulator pumps and control valves are set to the desired function based on internal temperature sensors and pressure transmitter measurements. See section **9 (Heat pump settings)** for more information on using the controller.

The device is equipped with a frequency converter (inverter) compressor. The inverter controls the compressor's rotation speed, which affects the power of the device. The controller always optimises the power regulation according to the operating mode and device conditions.

The circulator pumps are controlled according to measurements in the condenser and evaporator based on the temperature difference. The temperature difference settings depend on the operating mode. In other words, they are based on what the device is heating or cooling at the time. Temperature differences can be set using the controller's user interface.

The heat pump's automation system has an internal process bus that communicates with several systems in the heat pump via an IP bus. The heat pump's automation system can be connected to an external building automation system with a Modbus TCP/IP or Modbus RTU interface. The heat pump system has a built-in cloud connection to the Gebwell Smart Hub server. See section **15 (Modbus registers)** for more information.

Controller operation:

The heat pump's operation is based on capacity management through temperature specification. Depending on the operating mode, the heat pump's automation system determines the setpoint used to calculate the required capacity. The capacity shortfall is calculated according to the PI controller. When the capacity exceeds the compressor's minimum operating range, the start-up process begins. Each mode (heating, domestic hot water, cooling) has a designated functional sensor. See section **3.5 Heat pump's components and sensors** for an illustration of the sensors and components.

Start-up and operation

When the functional sensor is below its setpoint and the capacity counter reaches the start-up point:

1. The charge pump (Q9) starts at the start-up speed.
2. The source pump (Q8) starts at the start-up speed and operates throughout the initial start-up period.
3. The expansion valve (EEV) opens to the opening position.
4. The compressor's crankcase heater shuts down.
5. The compressor (K1) starts at the start-up speed and operates for a fixed start-up time (60 seconds).
6. The controller controls the compressor's power according to the operating mode while keeping the functional sensor at the setpoint.

The compressor's minimum operating time is 15 minutes. If the unit is used for mechanical cooling, the minimum operating time should be reduced to prevent the cooling liquid from becoming too cold. In cooling mode, the minimum operating time is 10 minutes.

In the event of a malfunction, the compressor shuts down, and the heat pump's automation system activates an alert. If heating is needed at the same time and the system includes a reserve heat source, the device switches to the reserve heat source.

For optimal device performance and compressor durability, the conditions must not be altered rapidly and continuously using, for example, an external change-over valve. Rapidly changing the conditions back and forth will cause fluctuations in the cooling device that could affect the compressor's durability.

Shutdown

1. If the minimum limit value for the compressor's operating range is greater than the power required for the operating mode, the compressor will rotate at the minimum speed until the capacity has decreased to 0% or the shutdown limit is reached.
2. The expansion valve closes.
3. The compressor rotates at minimum speed until the suction pressure transmitter (B85) reaches the set limit (pump down function) and the compressor stops.
4. The compressor's crankcase heater switches on if the oil temperature falls below the setpoint.
5. The source pump operates for the set run-on time and then switches off.
6. The charge pump operates according to the operating mode. If the operating mode requires continuous operation, the pump goes into standby mode. If the charge pump's operating mode is set to STOP, the pump shuts down.

The compressor's minimum rest period is 10 minutes. The compressor will not restart until the minimum rest period has elapsed.

© 2025 Gebwell

Safety functions

Temperature sensors and pressure transmitters protect the device from deviations from the limit values of the operating range. If a limit value is exceeded, the heat pump's automation system attempts to correct the device's operation internally by adjusting the speed of the circulator pumps and the compressor. If the conditions do not allow this, the device shuts down and activates an alert.

3.3 Heating functions

Domestic hot water

The heat pump charges the domestic hot water to the domestic hot water accumulator using the change-over valve (**Y3**). The domestic hot water accumulator has two temperature sensors that control the charging process.

The measurement in the upper part of the accumulator (**B2**) indicates the temperature of the domestic hot water, and the functional sensor (**B3**) in the lower part switches the charging process on and off. The domestic hot water temperature is set in the heat pump controller by the Gebwell Smart Control Hub, the app or the controller. The heat pump makes domestic hot water for the accumulator based on the set temperature.

Heating

The heat pump outputs heating water directly into the building's heating network. Automatic adjustment determines the setpoint for the supply water from the heating circuit based on the set heating curve and the outdoor temperature measurement.

The controller determines the heat pump's setpoint from the supply water setpoint. Based on this, the heat pump produces heating energy and keeps the supply water's temperature at the setpoint. The room temperature sensor also affects the setpoint.

In order for the heat pump to operate at maximum efficiency, the heating system and the brine circuit must be under ideal conditions. The difference between the heating system's output and return temperatures must be 5–8°C, and the difference between the collector's output and return temperatures must be 3–4°C. If the temperature differences deviate from these values, the efficiency will decrease, along with the savings. The heat pump's controller controls the charge and source pumps to achieve the desired temperature difference.

Factory settings

- Heating temperature difference: 5°C
- Preparation of domestic hot water: pressure control
- Collector temperature difference: 3.0°C

© 2025 Gebwell

3.4 Tips for making savings

The heat pump is intended to generate the desired heat and domestic hot water. The system attempts to meet these wishes by all available means within the limits of the setpoints.

Important factors affecting energy consumption are the indoor temperature, the domestic hot water consumption, the temperature of the domestic hot water, the quality of the house's insulation, and the desired level of comfort.

Keep the aforementioned factors in mind when changing the device's settings.

The factors affecting the device's efficiency (COP) include the following:

- The length of the operation cycle affects the cumulative efficiency of the cycle. When starting up, the cold process stabilises briefly. If the operation cycles are often short, the cumulative efficiency will be significantly lower than the nominal efficiency. The graph below provides a simplified overview of the device's momentary efficiency and cumulative efficiency throughout the operation cycle.

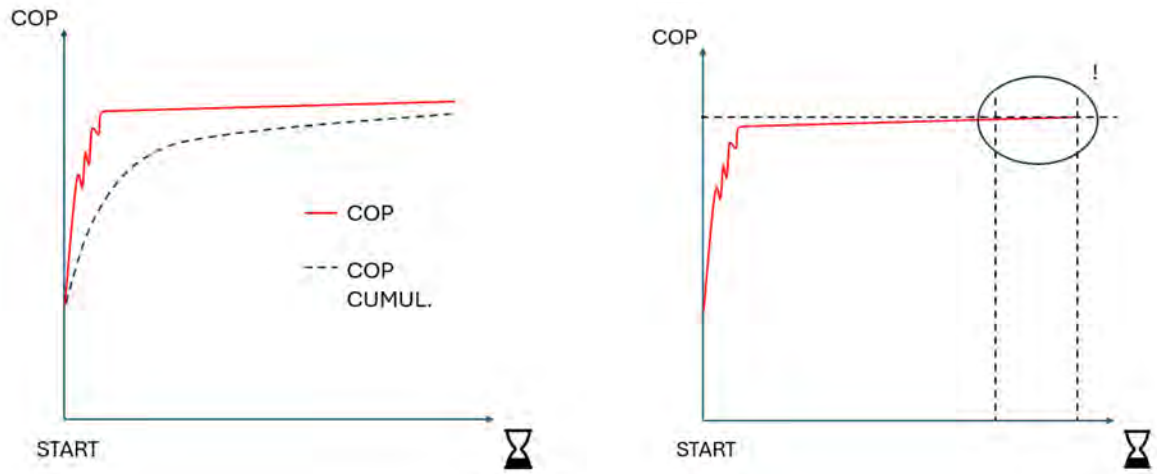

- Process changes such as switching the change-over valve from domestic hot water to heating and vice versa affect the efficiency momentarily. A sudden change in conditions causes a 'fluctuation in the control of the refrigerant circuit. If the process is frequently switched, the equipment will often become unstable.

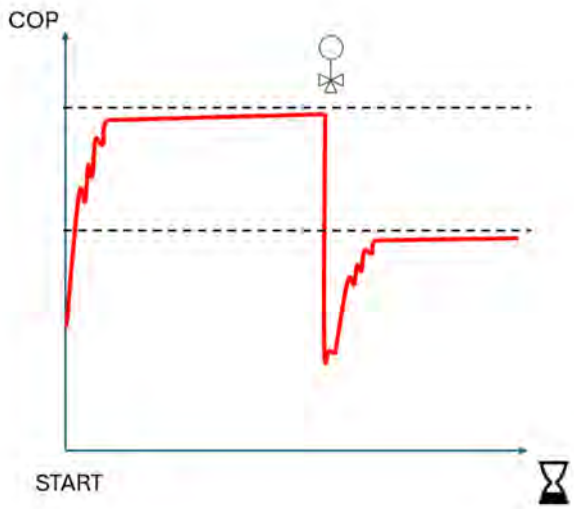

The longer the compressor runs continuously under stable conditions, the greater the efficiency over time.

Underfloor heating and radiator thermostats can have a negative impact on energy consumption. They reduce the flow rate in the heating system, and the heat pump compensates for this by raising the temperature of the network. This affects the device's operation and consumes more electrical energy.

Thermostats are only intended for adjustments due to "free heat" from the sun, people, fireplaces, etc.

© 2025 Gebwell

3.5 Heat pump's components and sensors

The heat pump contains components and functional and measuring thermal sensors installed inside it. The sensors are attached to the heat pump's components and insulated from external heat. Some of the sensors are inside the heat pump, and others are outside it.

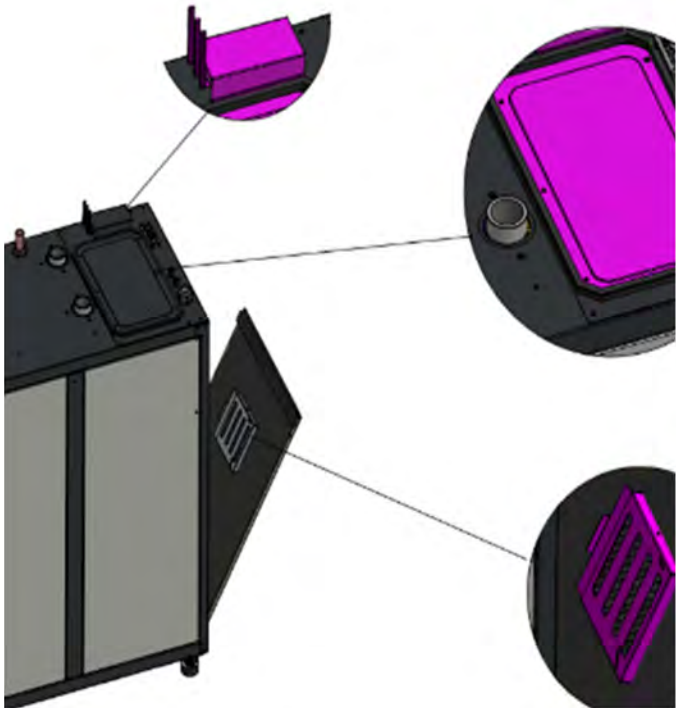

1 Router

2 Electrical connection box

3 Fresh air control damper

Figure 3.2 External components and air ducts

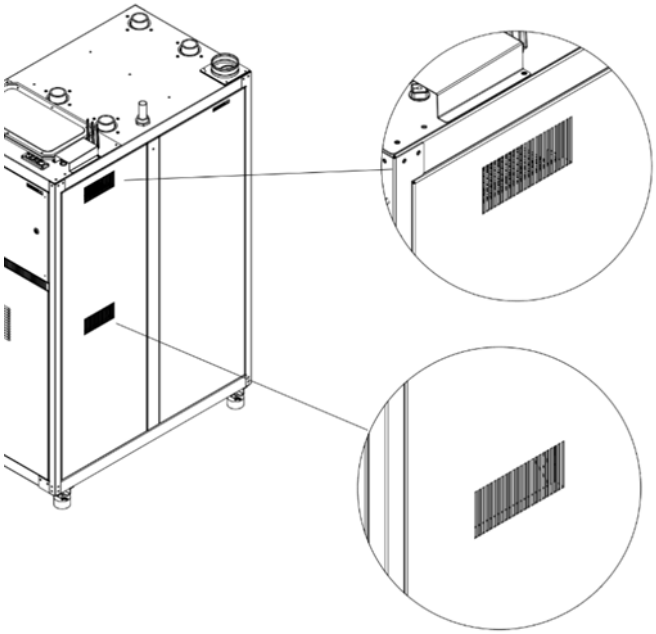

1 Frequency converter ventilation duct

2 Frequency converter fresh air duct

Figure 3.3 Frequency converter ventilation ducts

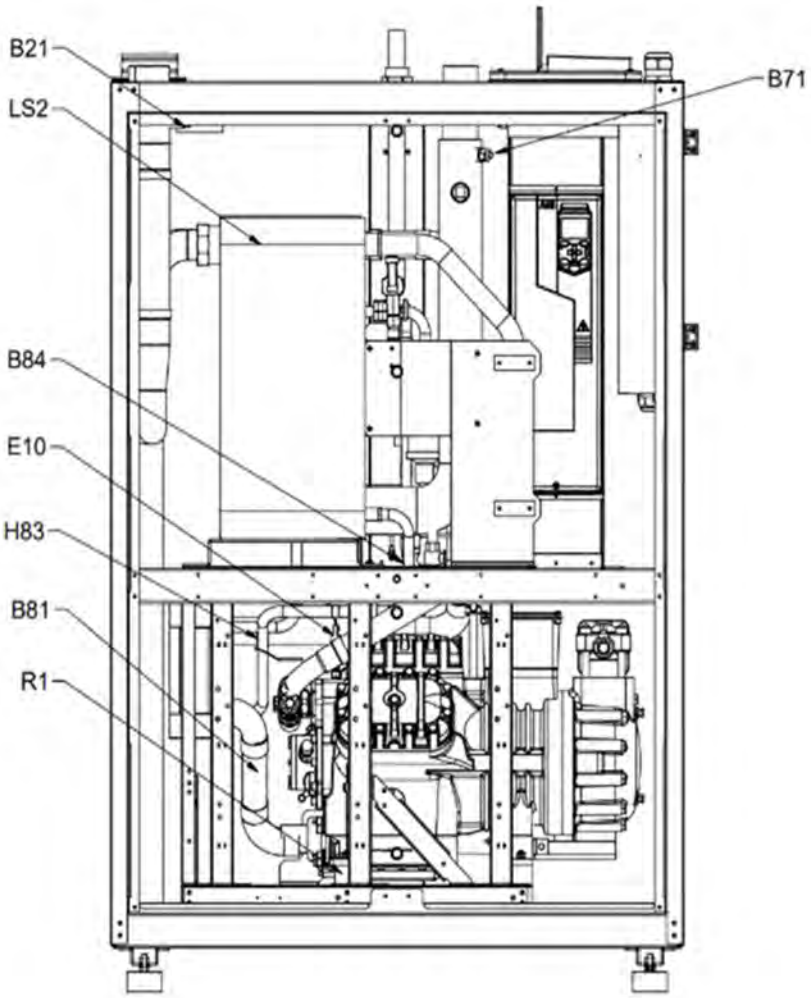

Figure 3.4 Components and sensors (left)

E10	High pressure switch
B71	Charging circuit temperature sensor, return
B81	Hot gas temperature sensor
H83	Pressure transmitter, condenser
R1	Crankcase heater
LS2	Condenser
B21	Charging circuit temperature sensor, supply
B84	Liquid line temperature sensor

© 2025 Gebwell

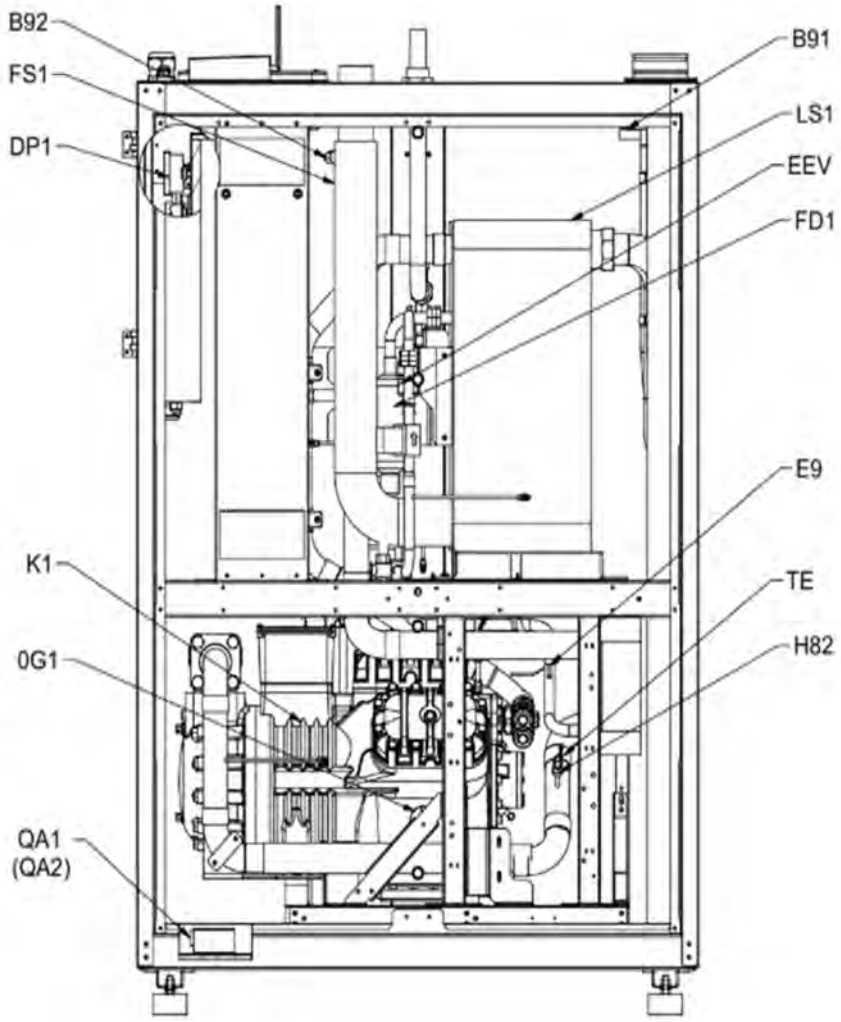

Figure 3.5 Components and sensors (right)

0G1	Oil glass
B85	Intake gas temperature sensor
B91	Collector inbound, temperature sensor
B92	Collector out, temperature sensor
E9	Low pressure switch
FD1	Filter dryer
H82	Pressure transmitter, evaporator
K1	Compressor
EEV	Expansion valve
LS1	Evaporator
QA1	Gas indicator
QA2	Secondary gas indicator (accessory)
FS1	Flow switch
DP1	Differential pressure
TE	Intake gas

4 Delivery and handling

Before unloading the delivery, the recipient must inspect it for any damage. Damage must be recorded in the waybill and reported to the transport company and Gebwell Ltd. Any damage detected after opening the package and hidden defects caused during transport must be reported to the supplier within 10 days.

4.1 Content of the delivery

- Gebwell G-Eco Core heat pump
- Installation, commissioning and maintenance manual
- Electric diagrams
- Outdoor temperature sensor
- Ventilation and controller (required accessory**)

*** A suitable ventilation air extractor is needed to operate the product in conformance with the requirements.*

4.2 Standard equipment

- External circulation pump/charging (Q9) Kolmeks L-50 4MDA 0,9 kW
- Router + possibility to use the customer's internet connection (factory installed on top of the device)
- Leak detector (QA1)
- Differential pressure transmitter (DP1)
- Outdoor temperature sensor (B9)
- Upper sensor of the domestic hot water accumulator (B2)
- Domestic hot water accumulator lower sensor (B3)
- Operation/maintenance/installation manual – includes electrical diagrams
- Warning labels (ventilation air duct outlet, access only by authorised persons, no fires, flame)
- Spare filter (fresh air)

© 2025 Gebwell

4.3 Optional accessories

- External collector circulator pump
- Charge energy measurement (flow meter)
- Collector flow switch
- Pressure measurement (charge circuit/collector/free choice)
- Gas separator for indirect circuits
- Network switch – connection manual
- TC1.4 – Cascade/additional heat control module -> includes B10, B11, B15 sensors (external)
- TC1.2 – Heating control groups/flow measurement control module -> includes B1, B12, B14
- TC1.5 – Active cooling control module -> includes B40, B41, B42, B43
- TC1.6 – Cooling control groups control module -> includes B16, B26
- TC1.7 – Domestic hot water/pressure measurement control module -> includes B38, B39
- TC1.8 – IO measurement module
- Change-over valves
- Heating control groups
- Valve groups
- Domestic hot water shunts

4.4 Storage

Before installation, store the heat pump in its shipping package in a warm, dry place. If the device is stored in a cold or humid environment, the electrical components may get wet, which could lead to problems in the operation of the device.

4.5 Recycling

When the heat pump is decommissioned, the refrigerants must be removed by an authorised refrigerant technician. Otherwise, the refrigerants must be disposed of as hazardous waste in accordance with local instructions.

Recycle the liquids inside the brine and charge circuits appropriately. Recover the oils from the heat pump and dispose of them as hazardous waste in accordance with the local instructions.

Return the empty heat pump to a reception point for electrical and electronic waste. For more information on these collection points, visit www.elker.fi. Relevant recycling charges have been paid for heat pumps and packaging materials delivered to Finland. For the nearest recycling point for packaging materials, visit https://rinkiin.fi/.

5 Installing the heat pump

Matters to note during installation and maintenance

Follow these installation instructions to install the system. Install the device firmly on a load-bearing surface to prevent the device from falling and causing damage to property or personal injuries. Ventilation must be started before commissioning.

Only lift the device at the locations shown in the instructions. The metallic edges of the heat pump could injure your hands when you are hauling the unit. Use slash-resistant gloves to move the heat pump.

Always turn off the main power of the device before performing any maintenance.

Remove all sources of ignition from the space before starting work. Do not start the equipment in dusty conditions.

Use only spark-resistant tools and clothing and a leak detector suitable for R290 refrigerant during maintenance.

Never flush the heat pump with water.

Do not touch the buttons with wet hands.

Do not use any substance other than nitrogen to pressure-test the refrigerant circuit.

Do not touch refrigerant pipes with your bare hands while the device is in operation.

Use original accessories and components when installing the device.

Keep all the device's housing panels in place during installation. The device shuts down if the panels are removed while it is operating.

Do not cover the heat pump's air intake or outlet openings (**Figure 3.2 and Figure 3.3**).

Switch off the device in a controlled manner using the operating terminal before cutting the main power. Do not switch off the system using the main switch.

Do not switch off the power supply immediately after switching off the heat pump. Wait for at least 5 minutes.

5.1 Transporting the heat pump

Make sure that the heat pump cannot tip over during transport or lifting. Consider the weight of the unit when planning a lift.

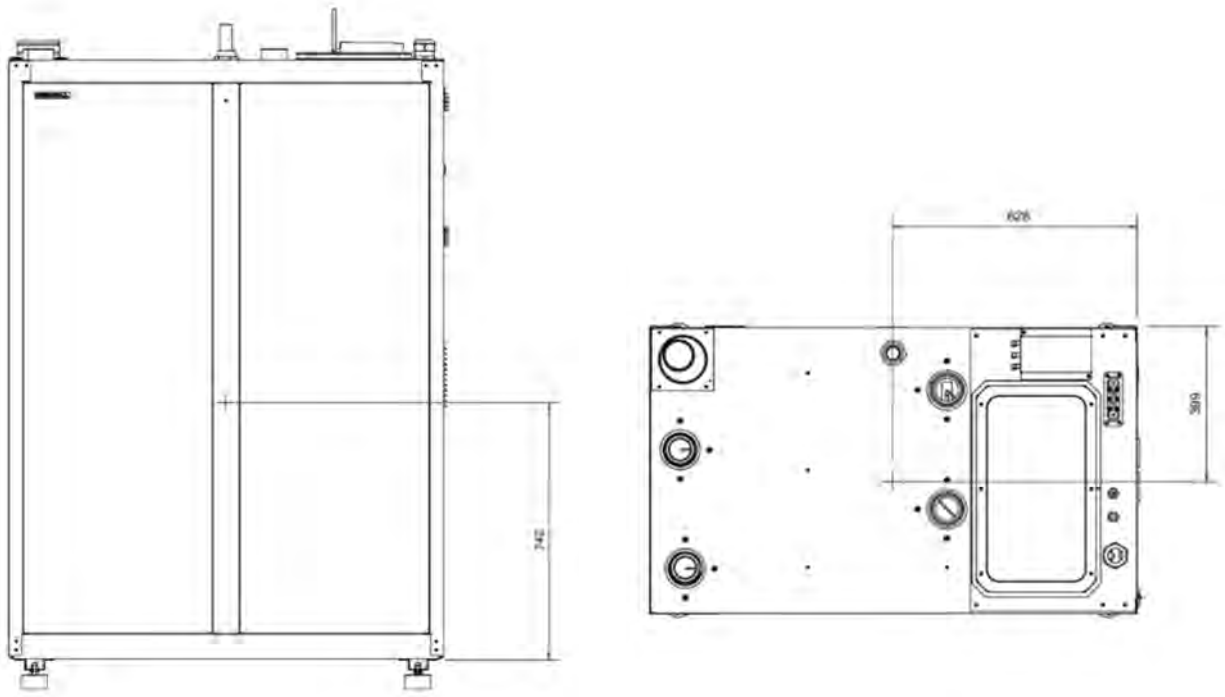

Figure 5.1 Heat pump's centre of gravity

Transport the heat pump to the installation site preferably using a pallet truck or similar. The heat pump can also be transported by a crane, using two cloths or straps suitable for the transport weight. Use a soft fabric or similar item to protect the heat pump's painted surfaces and prevent damage to the paint surface. Ensure the straps cannot slip out of place during lifting. Safe lifting must be planned and is the responsibility of the supervisor performing the installation.

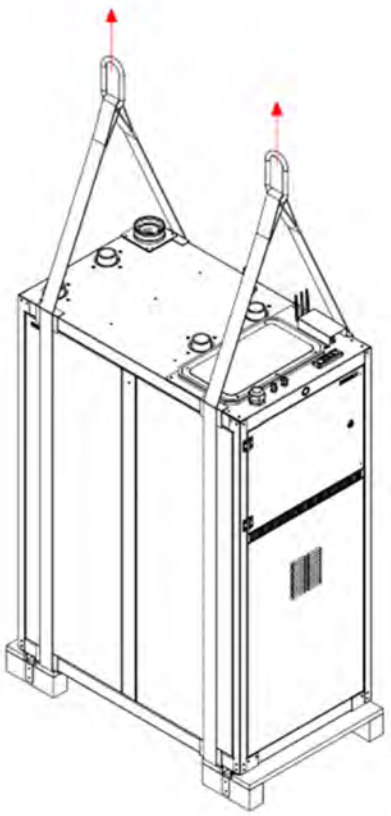

Figure 5.2 Lifting with cloths

You can also temporarily tilt the heat pump to an angle of up to 45°, but do not leave the pump in an oblique position for extended periods of time, even during transport. If the heat pump is tilted, it must be left in a vertical position for at least two hours before being started up. This is to ensure that the lubricating oil in the compressor flows into the right place. Only tilt rearward as shown in **Figure 5.3.**

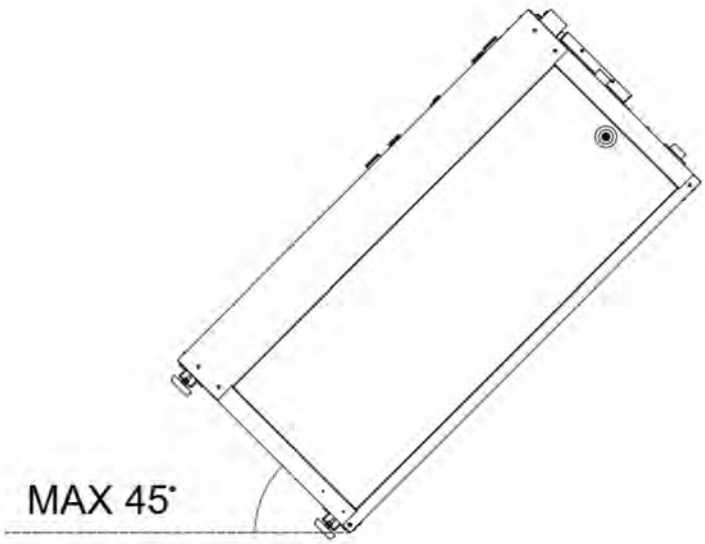

Figure 5.3 Tilting the heat pump

5.2 Removing the heat pump package

1. Carefully remove the plastic without scratching the device.
2. Make sure the product is correct and includes the correct equipment.
3. Lift the heat pump with a pallet truck or claw jacks. Be aware of the device's centre of gravity.

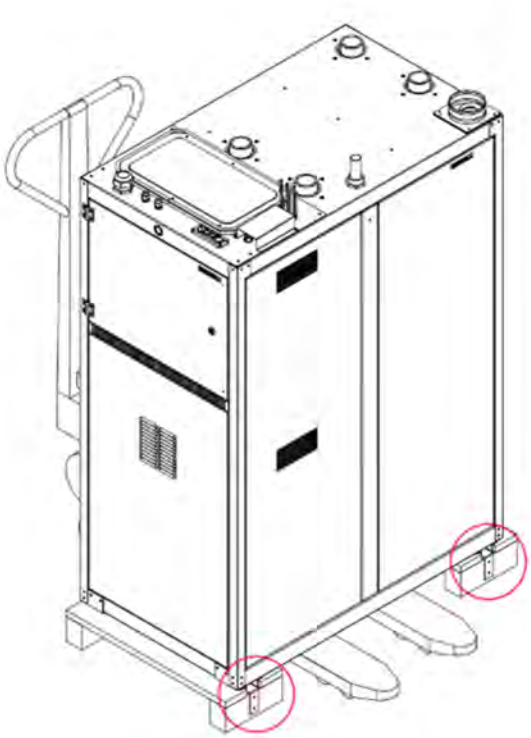

Figure 5.4 Lifting the heat pump and locating the transport support

4. Remove the transport supports.
    a. Loosen the mounting bolts of the transport supports located on the frame.
    b. Remove the screws from each bracket.
    c. Remove the transport support brackets.
5. Install the adjustment feet of the heat pump in place and adjust them close to the desired height.

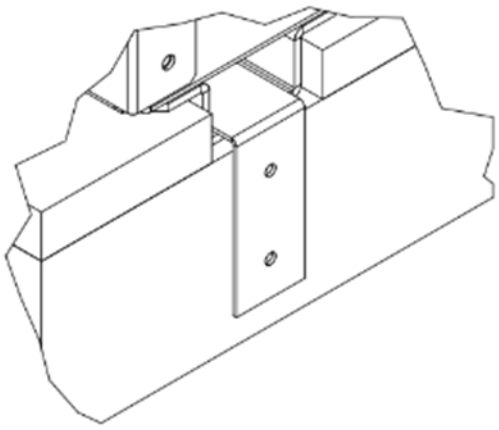

Figure 5.5 Removing the transport support brackets

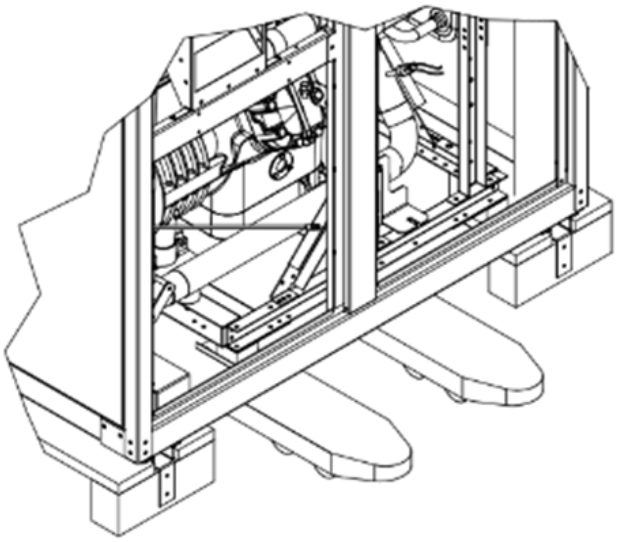

Figure 5.6 Removing the transport supports

6. Pull the transport platforms out from under the heat pump.
7. Install the adjustable feet on the bottom of the heat pump at the locations of the removed transport brackets.
8. Lower the heat pump onto the adjustment feet.
9. Adjust the heat pump to a level and stable position using the adjustment feet.
10. Ensure that the frame of the heat pump is not in contact with the building structure, except through the adjustment feet.

5.3 Removing the transport support from compressor unit

Remove the transport support from the compressor unit before commissioning.

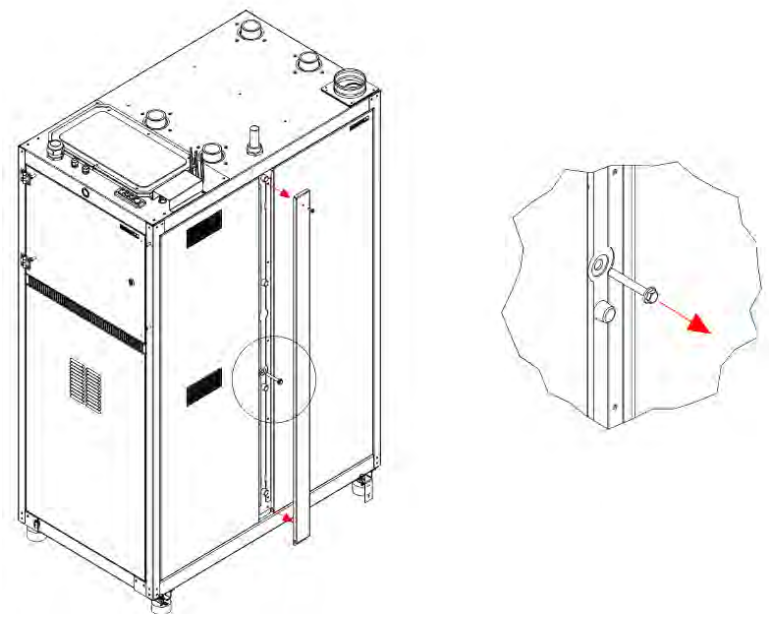

Figure 5.7 Removing the transport support from compressor unit

1. Unscrew the bolt holding the side trim of the heat pump housing and remove the side trim.
2. Remove the transport supports from both sides of the heat pump.
3. Install the protective plugs supplied with the heat pump in place of the removed bolts.
4. Reinstall the side trim.

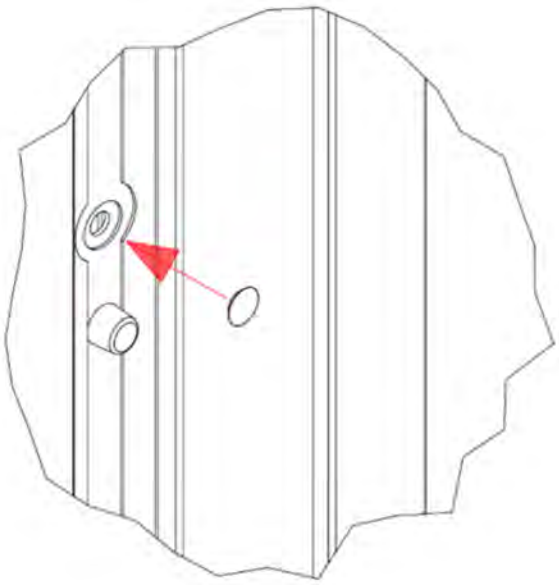

Figure 5.8 Installing the protective plug

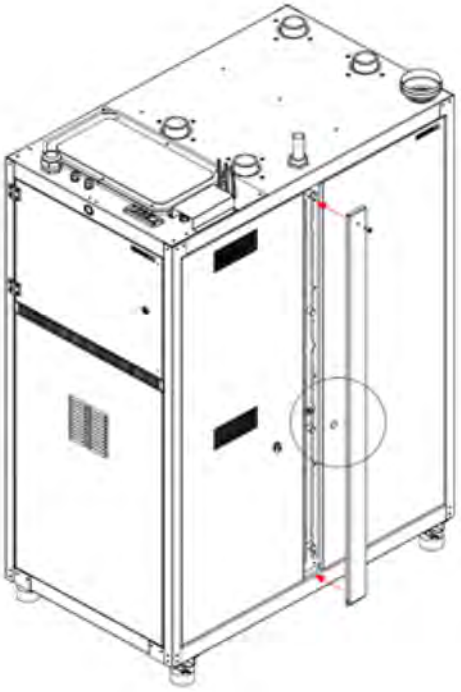

Figure 5.9 Installing the side trim and bolt

5.4 Heat pump placement

The device should not be installed in a location:

- where flammable gases may leak
- where corrosive gas may be generated or accumulated
- where volatile flammable substances are handled
- that is very dusty
- near devices that generate an electromagnetic field or high-frequency harmonics.

We recommend placing the heat pump in a separate technical space. Gebwell G Eco heat pumps do not cause a zone classification to be assigned to the operating premises. When you plan the placement, consider the following factors for safety, ease of use, and serviceability:

- The recommended temperature for the installation location is **+15°C to +25°C** and a maximum of **+30°C**.
- The room must have adequate ventilation.
- The volume of the space must be at least (other spaces than machine room)
    - Pro 120 **17,5 m³**
    - Pro 120 HT **17,5 m³**
- The humidity should be low enough to prevent condensation on the cold pipe sections of the collector.
- R290 refrigerant is heavier than air. When it enters a free space, it accumulates on the floor.
- When you position the output from the ventilation duct, make sure the venting of extraction air does not pose a hazard to the environment or to people. If the ventilation duct of the heat pump is directed toward areas where people move or spend time nearby, it is recommended to place a sign near the outlet advising people to avoid unnecessary presence in the immediate vicinity of the ventilation duct.

The heat pump compressor generates a noise that can be carried by the structures of the house into other rooms. Place the heat pump in a location where noise cannot be conducted in a way that adversely affects residential premises. If necessary, you can install supplementary noise insulation in the wall structures between the heat pump's installation location and residential premises.

Noise can be prevented from travelling through structures using solutions such as special floor structures in the area reserved for the heat pump. A cast floor that is separated from the building's other areas can prevent noise from travelling through the floor and into residential premises. You can also use flexible parts for pipe connections to prevent vibrations from transferring into structures. Support the piping so that you do not obstruct the flexible structure inside the device.

The recommended maintenance conditions for heat pumps are shown in **Figure 5.10 and Figure 5.11**. However, the heat pump can also be installed with at least 50 mm of maintenance clearance to the rear and at least 100 mm of clearance to the left and right. In this case, the heat pump must be installed so that it can be easily moved for maintenance. The main maintenance direction is from the front of the heat pump. Ensure that the device's ventilation ducts are protected from debris and dust.

Electrically conductive dirt inside the frequency converter may cause a malfunction.

The dimensions given above ensure that the heat pump can be serviced without obstructions. However, please note the zone classification around the heat pump when servicing the cooling circuit. In this case, the zone classification around the heat pump (**Figure 5.12, Figure 5.13**) requires a safety distance of one metre. Any electrical equipment within one metre of the heat pump must be de-energised while servicing the cooling circuit.

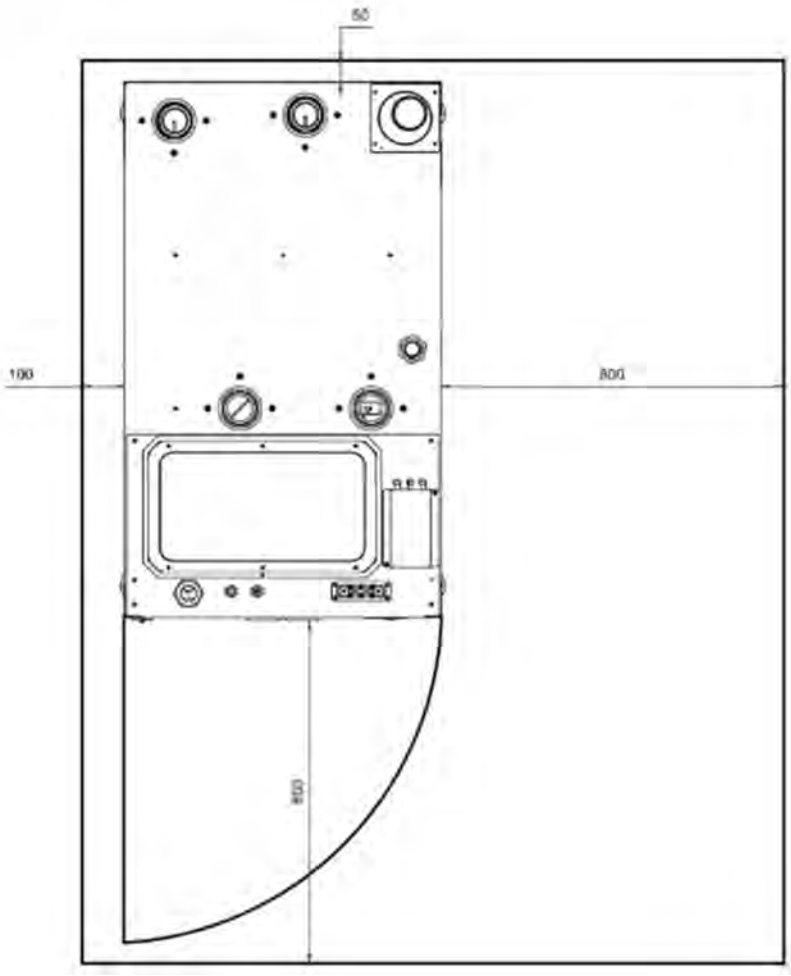

Figure 5.10 Clearance required for one heat pump

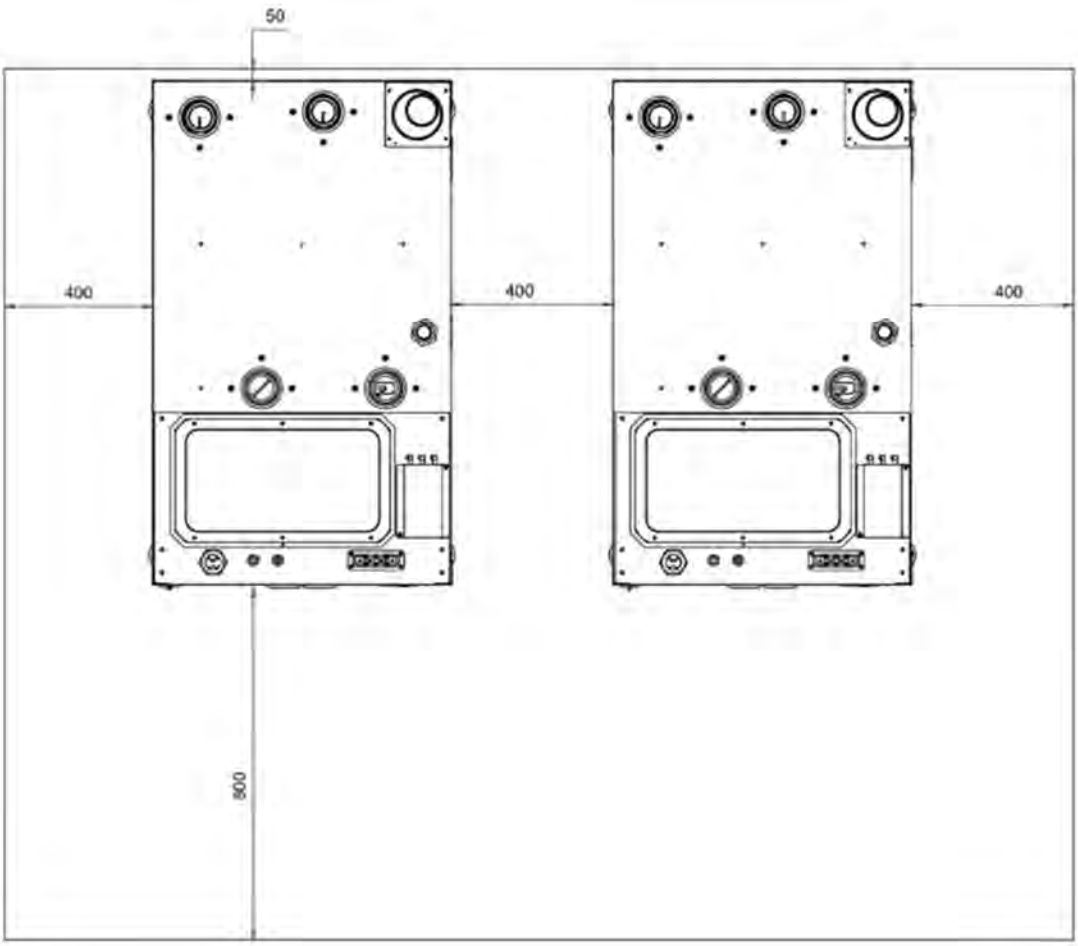

Figure 5.11 Clearance required for two heat pumps

If the heat pump is installed with smaller clearances than stated above (**Figure 5.10** and **Figure 5.11**), the manufacturer reserves the right to charge the customer for any additional costs incurred during warranty servicing. The unit requires the clearance shown in the illustrations on both sides to ensure access to all refrigerant circuit components.

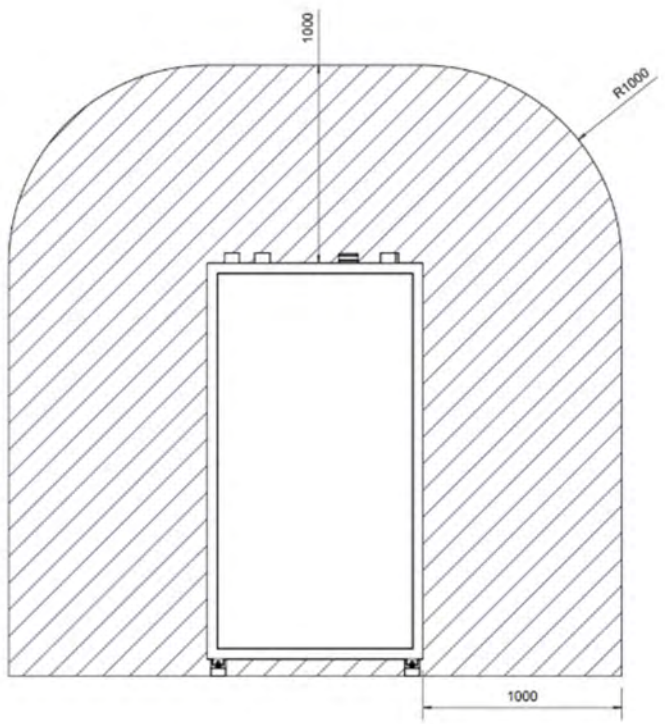

Figure 5.12 Area classified for maintenance of the cold circuit (front and side)

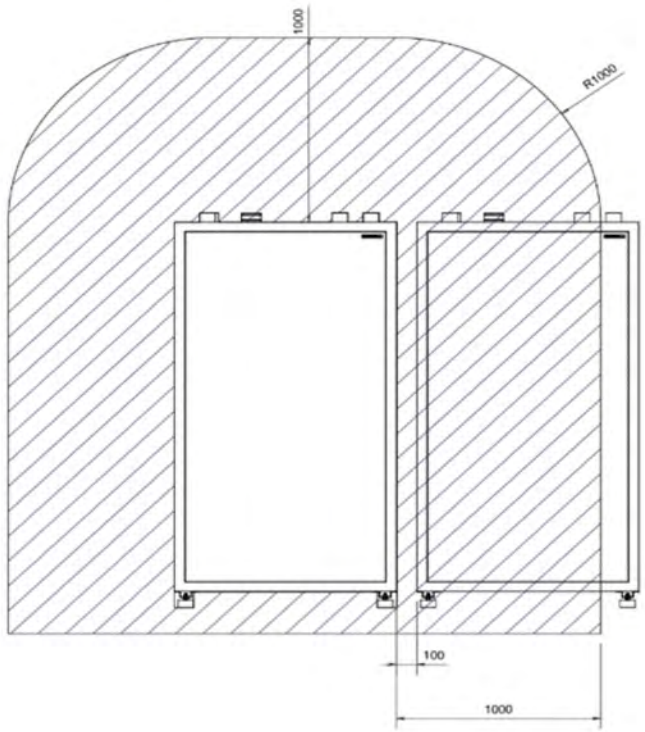

Figure 5.13 Area classified for maintenance of the cooling circuit (multiple heat pumps)

5.5 Installing the ventilation air extractor

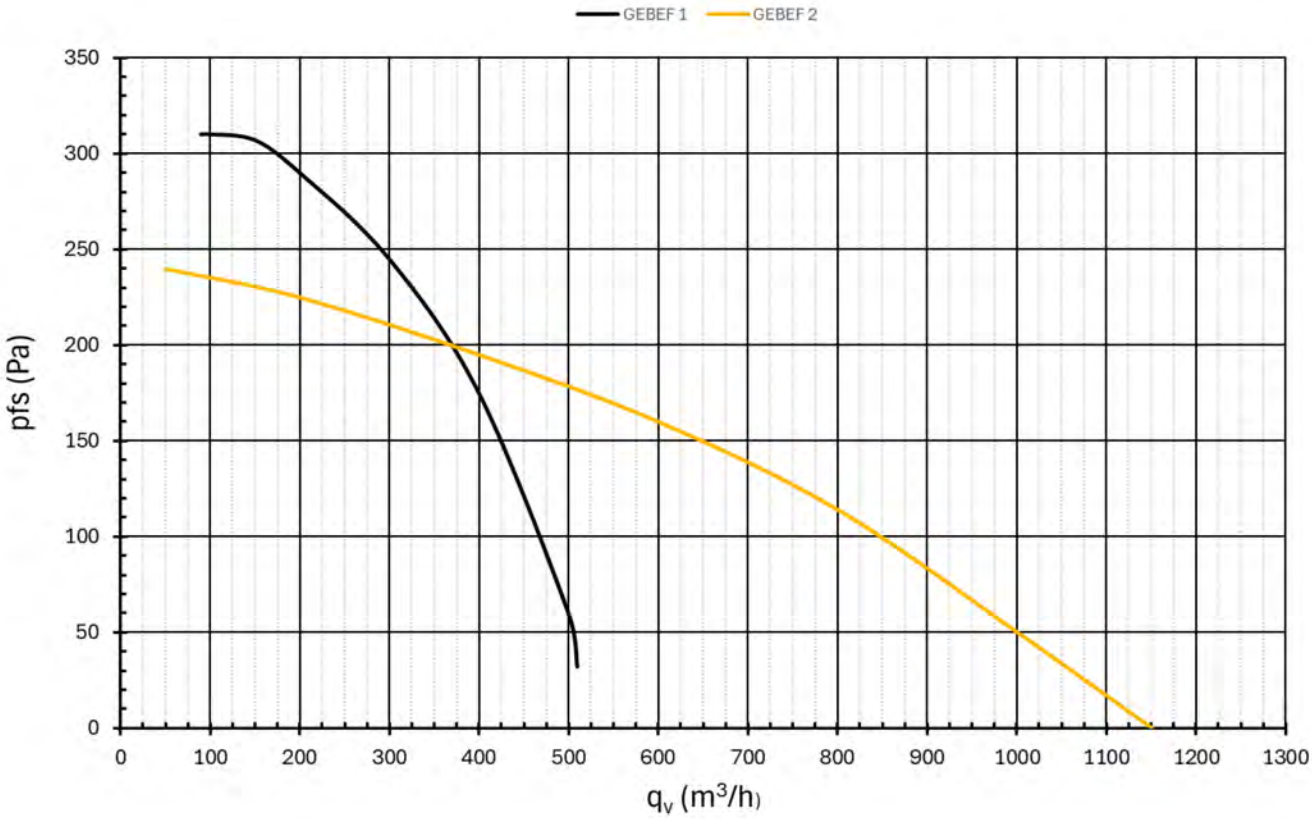

Graph 5.1 Performance diagram for ventilation air extractors

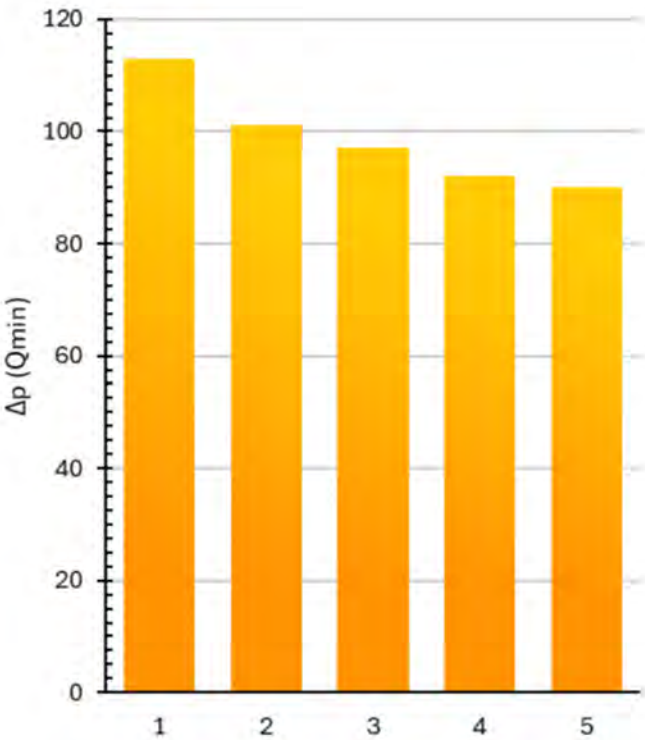

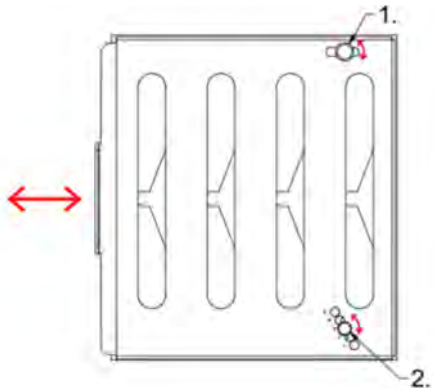

1. Locking bolt. Loosen to adjust the damper and tighten afterwards.
2. Damper adjustment positions 1-5. Remove the bolt and set the damper to desired position, align the holes and tighten bolts.

Graph 5.2 Internal pressure loss for ventilation at the Q_{min} 164 m^3/h flow rate (damper positions 1–5)

The ventilation duct must be designed to suit the installation based on **Graph 5.1** and **Graph 5.2** so that the device-specific Q_{min} flow rate is achieved when the ventilation air extractor's SAFETY function is active. The Q_{min} flow rate must be verified by measurement when commissioning the device. A measuring/control damper equipped with a measuring device must be installed in the device's air outlet duct to allow the air flow rate to be measured. After measuring, the measuring/control damper must be adjusted to the fully open position so that the flow area through the duct is not restricted.

G-ECO Pro 120 Q_{min} = 157 m^3/h

G-ECO Pro 120 HT Q_{min} = 164 m^3/h

Minimum suggested diameter of the body duct (GebEF1)	**160 mm**
Minimum suggested diameter of the body duct (GebEF2)	**200 mm**
Minimum suggested diameter of the machine-specific branches	**125 mm**

See section **7.7 Connecting the ventilation air extractor** for instructions on the electrical connection of the ventilation air extractor.

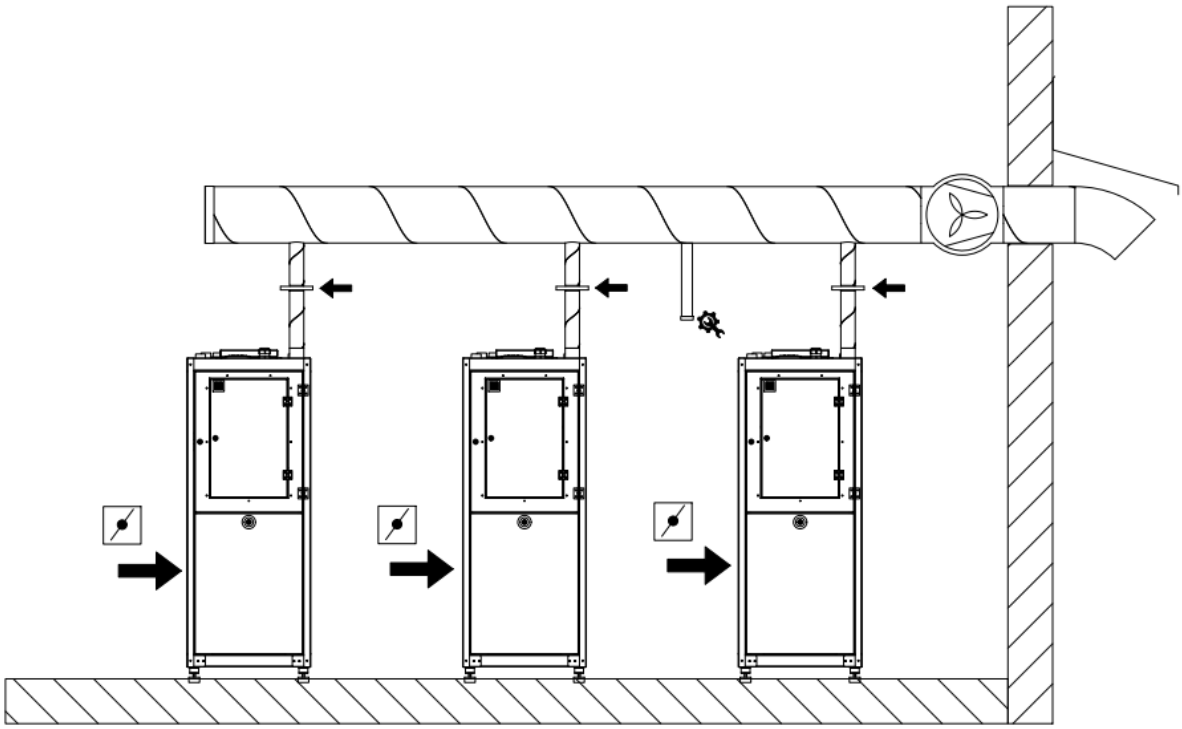

Figure 5.14 Example image of ventilation air extractor and duct installation in a cascade system

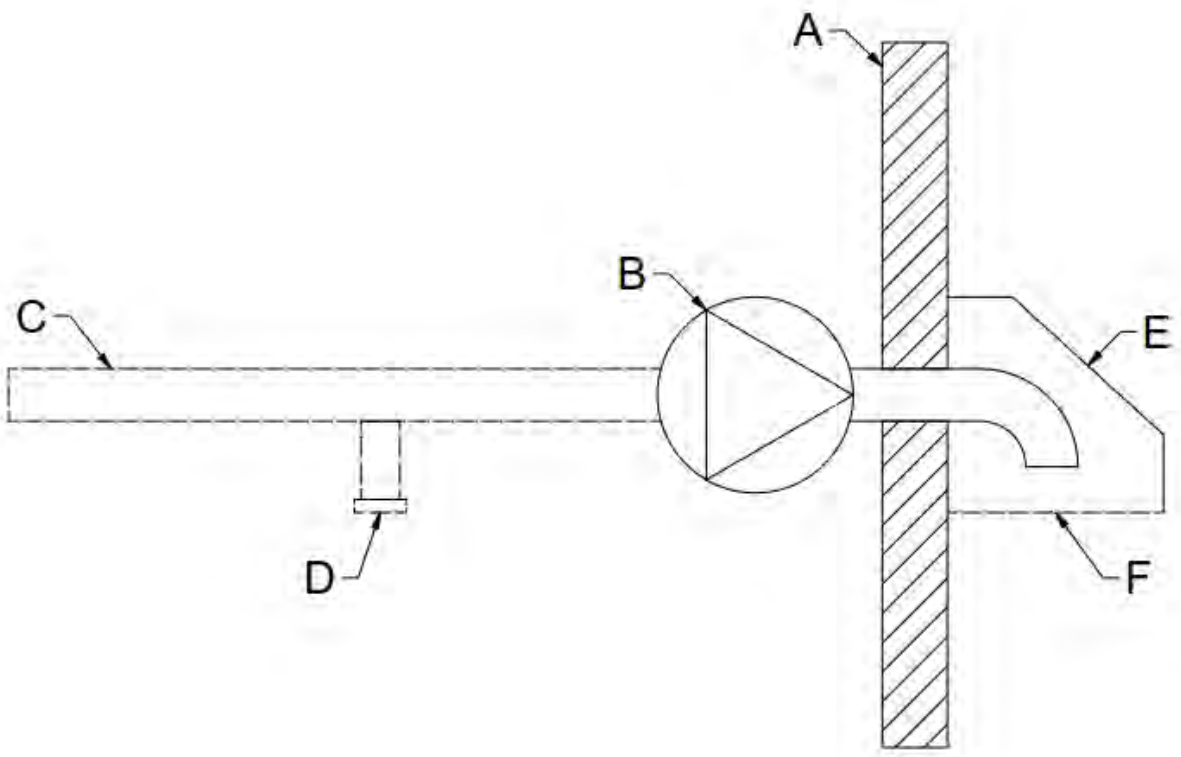

Figure 5.15 Ventilation air extraction

A.	Exterior wall	D.	Service connection – plugged
B.	Air extractor	E.	Weather protection
C.	Ventilation duct	F.	Protective net (protection from small animals)

The ventilation air extractor must be installed inside as close to the ventilation duct opening as possible. If the ventilation air extractor be installed close to the ventilation duct opening, the ventilation duct must be air-tight on the extractor's pressurised side if it is in a room.

A safe exit route must always be planned on a case-by-case basis.

Ensure that the following are not near the ventilation duct opening:

- Emergency exits
- Exits
- Ignition sources
- Fresh air intakes

5.6 Removing and replacing the housing panels

The housing panels should be in place at all times except during maintenance work. The device will shut down if the outer panels are open while it is operating. During installation and commissioning, the outer panels must remain attached. Before removing the housing panels, check for leaks using the leak detector. There is a plugged opening on the bottom of the device. Use this opening to measure whether any refrigerant has leaked before opening the other panels.

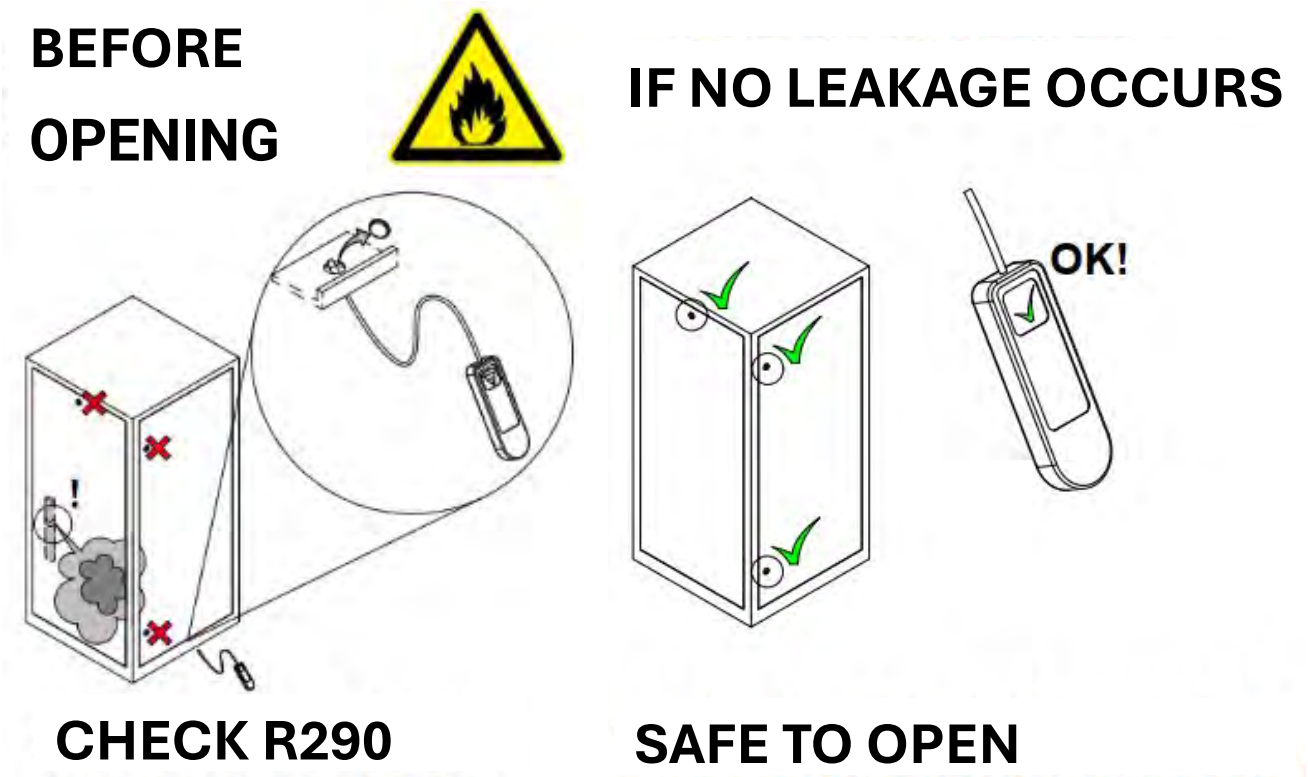

Figure 5.16 Testing for leaked refrigerant in the device

Remove the housing panels from the heat pump by opening the locks on the panels and pulling the panels outwards. The locks open by turning the key counterclockwise. To put the panels back in place, lift the bottom edge of the panel in position so that the lip at the bottom edge of the panel goes in the opening made for it in the bottom plate of the heat pump. Turn the key clockwise to lock the panel in place. Note that grounding wires are attached to the doors. The method for attaching the rear door panel is different from the others: instead of a locking mechanism, the door has bolts on the top edge.

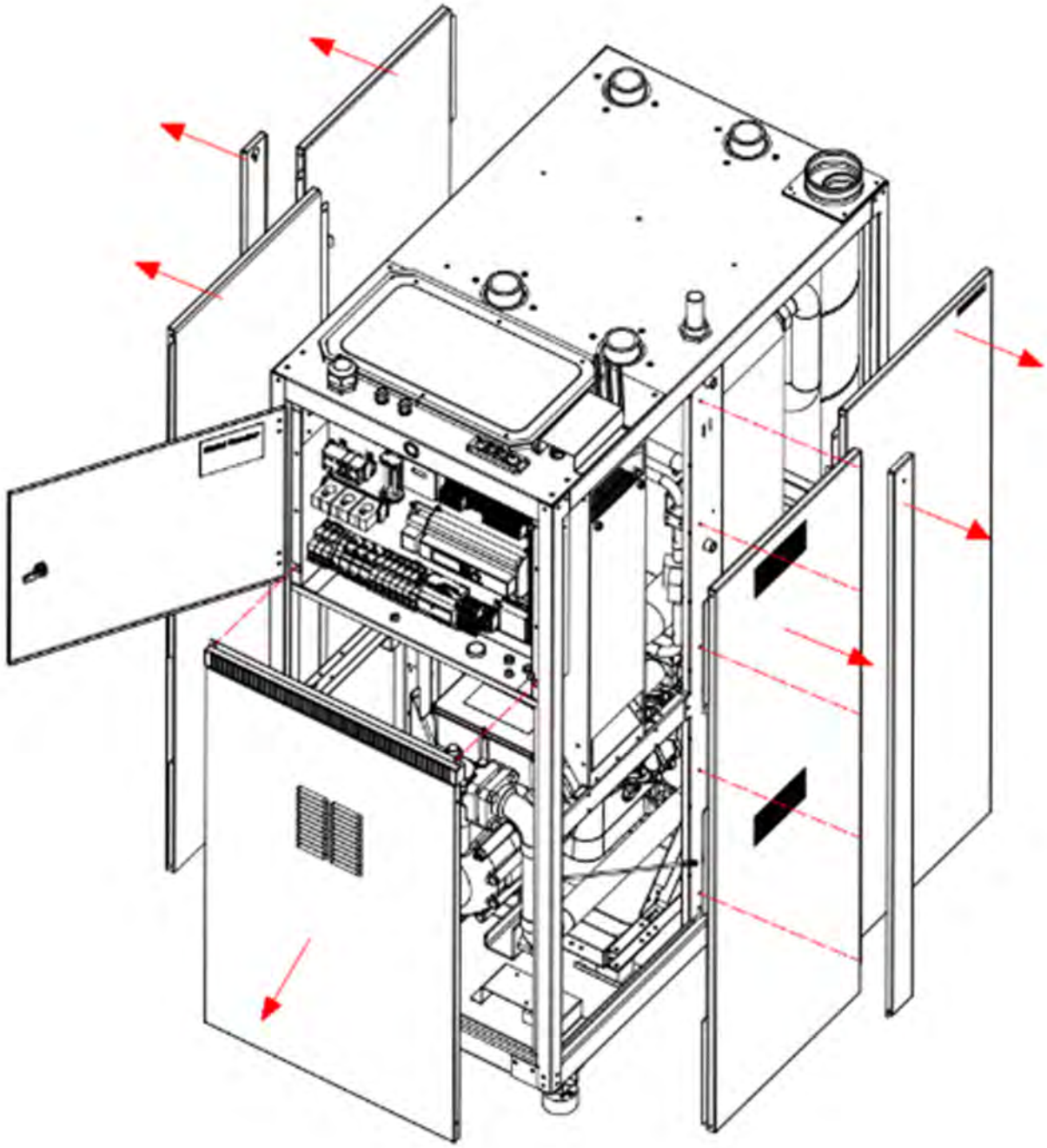

Figure 5.17. Opening the housing panels

6 Pipe installations

Pipe installations must be carried out in accordance with the regulations in force. Each pipeline must have a shut-off valve and a terminal pair to allow it to be disconnected from the circuit.

Install a dirt separator (**Figure 6.2**) in the return water pipes of the charge circuit and the collector to prevent any impurities in the network from entering the heat exchanger and causing a blockage in the exchanger. To facilitate the cleaning of the strainer, install a shut-off valve near the strainer.

When the system comprises more than one heat pump, install non-return valves in the charge circuit and collector of each compressor unit. Non-return valves prevent incorrect fluid circulation in the system.

Pipe installations should begin with the installation of the ventilation air extractor and ventilation ductwork. The ventilation air extractor must be on and create negative pressure in the heat pump enclosure throughout the installation of the heat pump. The extractor must be installed as close to the duct opening as possible.

The device manufacturer is not responsible for problems caused to the heat pump by rust in the network containing air. To protect the heat pump from impurities in the liquid circuits, use dirt separators equipped with magnets.

The table below explains the symbols used in the diagrams.

Symbol	Description	Symbol	Description	Symbol	Description
	Shut-off valve		Balancing valve		Dirt separator
	Venting valve		Change-over valve		Circulation pump
	Non-return valve/one-way valve		Control valve	K	Compressor
	Expansion valve		Diaphragm expansion tank	B	Temperature sensor
	Safety valve		Plate Heat Exchanger	PI	Pressure indicator

The sensor position markings used in the diagrams are shown below.

B9	Outdoor temperature sensor	B38	Domestic hot water supply temperature sensor
B2	Domestic hot water accumulator upper sensor	B1, B12, B14	Common flow sensor
B3	Domestic hot water accumulator lower sensor	Q2, Q6, Q20	Heating circuit pump
B10	Cascade sensor	Y3	Domestic hot water tank change-over valve
B15	Heating accumulator lower sensor	TV2, TV3	Heating circuit bypass valve
B11	Additional heat control sensor	TV38	Domestic hot water mixing valve
B39	Domestic hot water circulation temperature sensor		

The markings relating to specific charts are presented separately next to each chart.

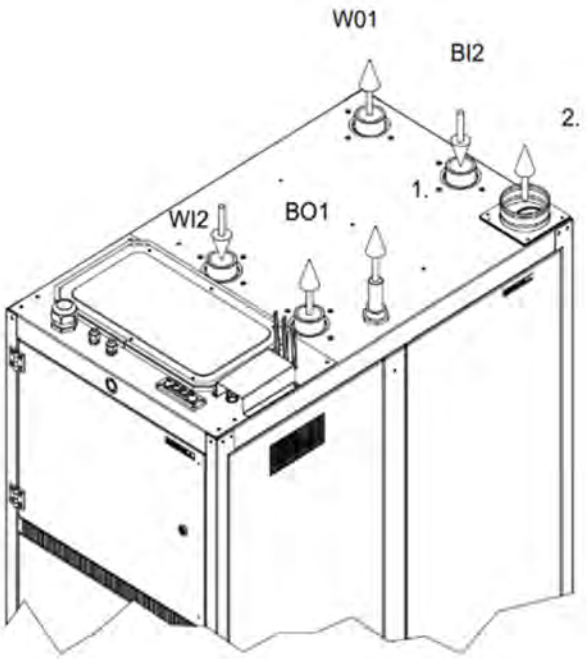

Figure 6.1 Heat pump connections

BO2	Collector return/in G2 ½”	WO1	Charge circuit input/output G2 ½”
BO1	Collector input/output, G2 ½”	1	Ventilation air duct 125mm
WI2	Charge circuit return/inbound, G2 ½”	2	Safety pipe outlet

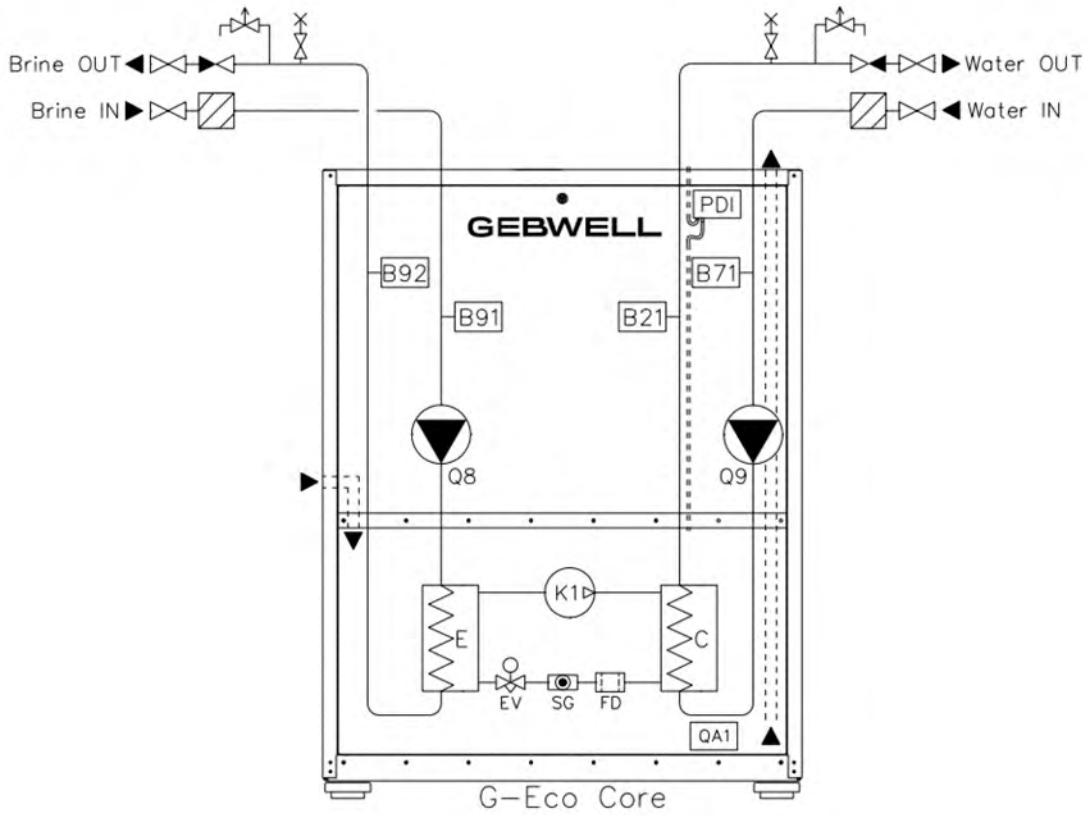

Figure 6.2 Example diagram of the piping layout

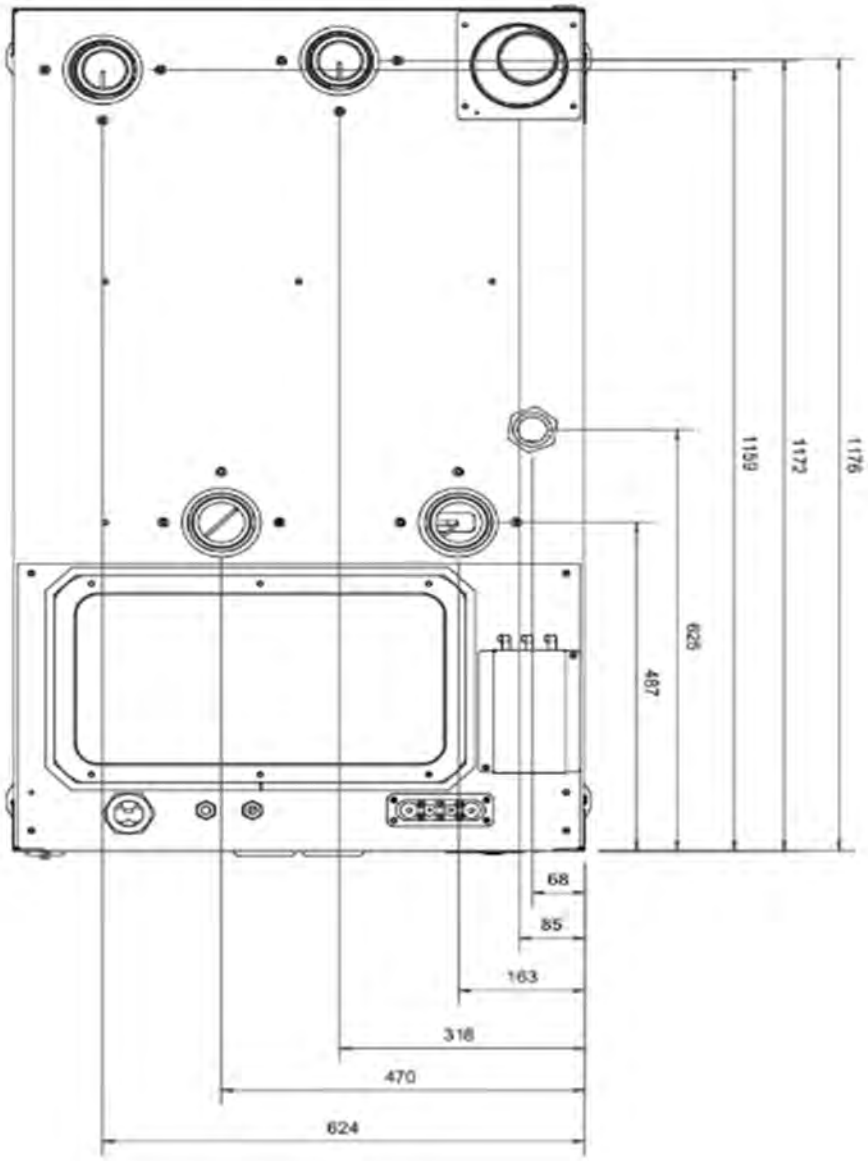

Figure 6.3 Installation dimensions for pipe connections

6.1 Protection of indirect circuits

When using R290 refrigerant in a heat pump, the intermediate circuits connected to the heat pump must be protected against equipment failure. Protection prevents the refrigerant from entering systems located in the building's living areas.

Install air vents primarily in the accumulators. If the system does not have at least one accumulator, the indirect circuits must be protected with gas separators installed in the line leading from the heat pump. The gas separator installed in the pipe must be of a type that allows the entire liquid flow to pass through the gas separator. If the system has more than one heat pump, protect the intermediate circuits with a gas separator installed on the common line.

Connect the pipes from the gas separators to the maintenance connection of the ventilation duct so that any liquid that may pass through the gas separators does not flow through the ductwork to the heat pump or extractor.

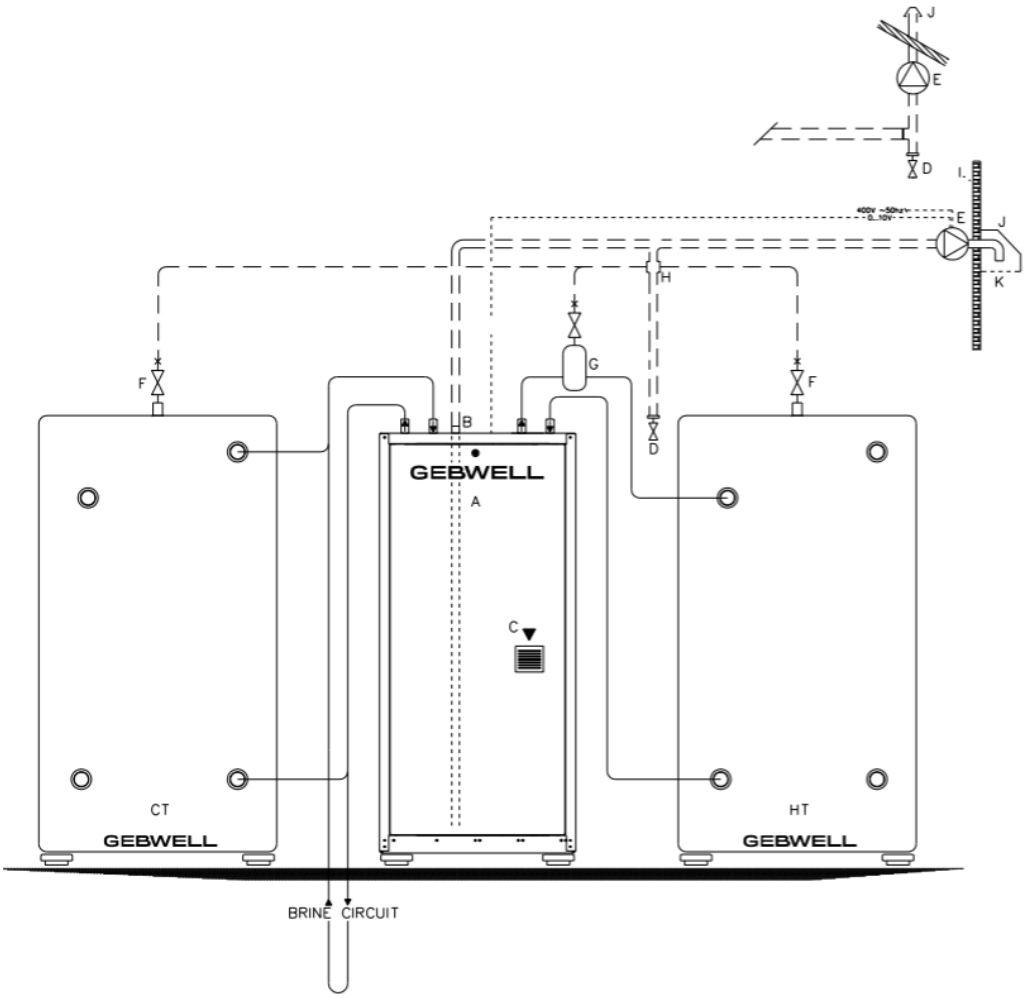

Figure 6.4 Indirect circuit protection

A.	Heat pump	F.	Gas separator – charge output (water out)
B.	Ventilation duct	G.	Gas separator – collector output (brine out)
C.	Heat pump's fresh air (control valve)	I.	Exterior wall
D.	Service port – plugged (water collector) *	J.	Weather protection
E.	Ventilation air extractor (ATEX)	K.	Protective net (protection from small animals)

** Should be installed near the heat pump. Can be utilised when servicing the cooling device – a ventilation hose is connected to the service port.*

6.2 Brine circuit

The collector is installed according to the site-specific plan. The collector pipe network should steadily rise towards the heat pump to prevent air pockets. If this is not possible, venting valves should be installed at high points. Before installing the heat pump, flush the collector pipe network to remove any impurities that may remain after installation.

- Insulate all of the collection pipes in the building using closed-cell insulation to prevent condensation. The pipelines must be insulated before the device is started.
- Only use connecting components designed for cold conditions in the collector.
- Use rubber-insulated brackets for pipes.
- Install shut-off valves in pipe connections as close to the heat pump as possible.
- Enter the type of collector fluid and the freezing point in the installation record.
- The collector fluid must be frost-resistant to -15°C or below. The collector fluid must contain a corrosion inhibitor.
- Ensure that the top of the heat pump and the electrical equipment are entirely free of water during operation.
- Only use a diaphragm expansion tank in the collector. Using a flat expansion tank is not recommended.
- Before pressurising the system, adjust the air bump in the diaphragm expansion tank to the planned level. Check the air bump when the circuit is open.
- Connect the collector's valve group and related expansion tanks as shown in the diagram. The arrow on the poppet seat indicates the flow direction.
- The collector must be pressure-tested with 3 bars of pressure, and the test pressure must be sustained for at least 30 minutes.

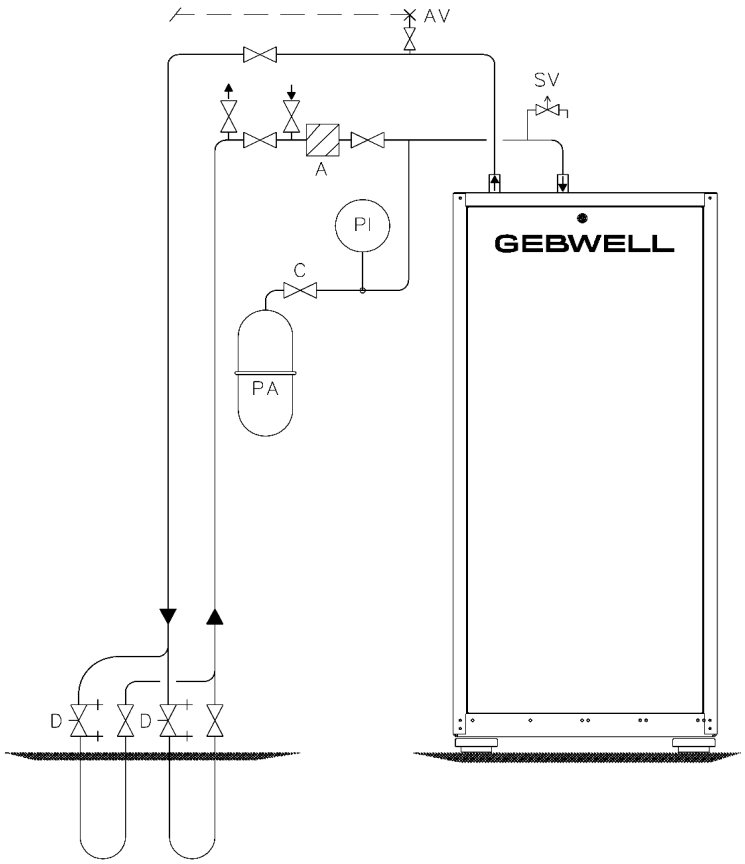

A	Dirt separator
AV	Air vent
SV	Safety valve
C	Shut-off valve
D	Balancing valve

Figure 6.5 Collector circuit piping layout, one heat pump

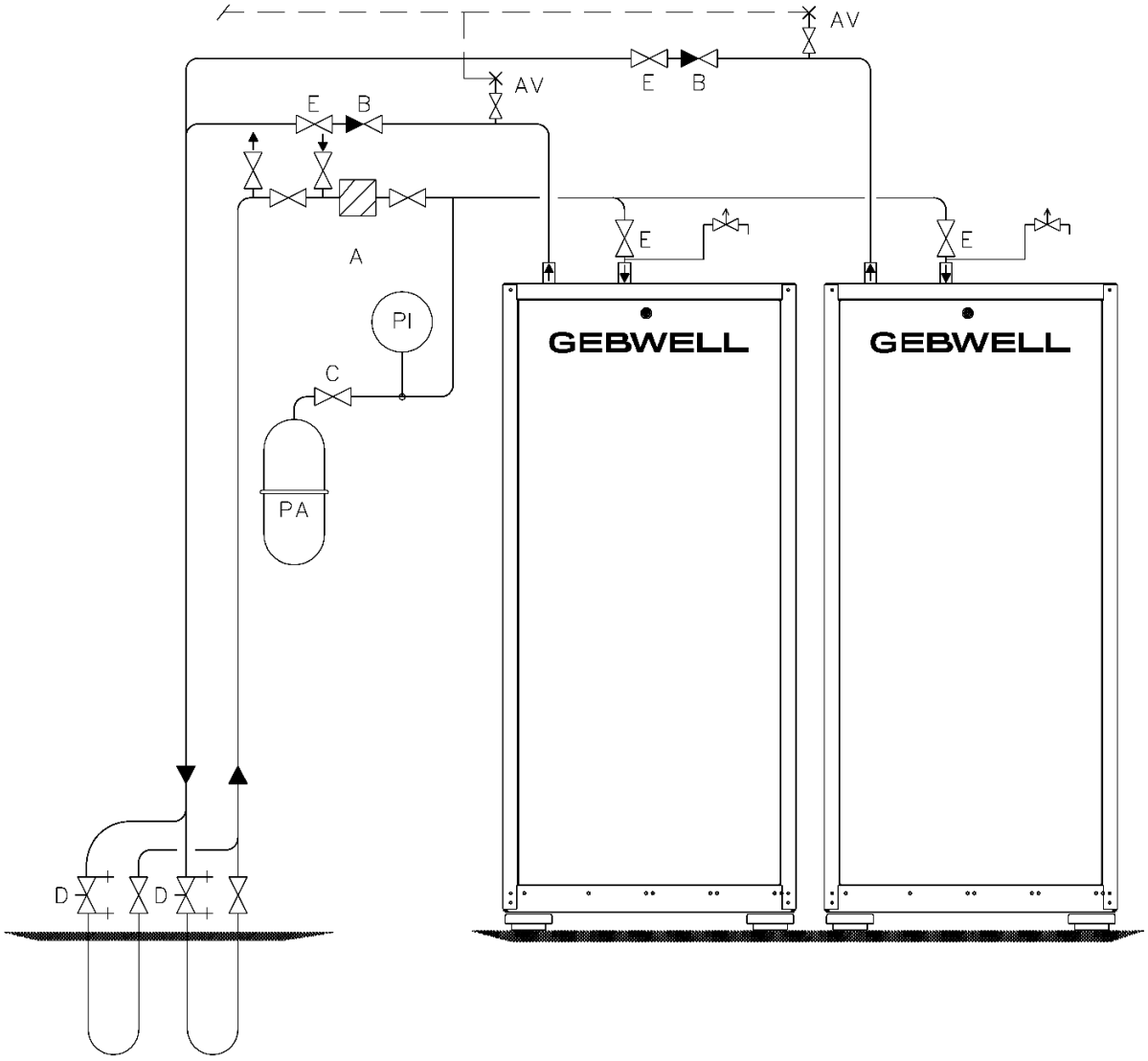

Figure 6.6 Collector circuit piping layout, two heat pumps

A	Dirt separator
B	Non-return valve
C	Shut-off valve
D	Balancing valve
E	Shut-off valve
AV	Air extractor
SV	Safety valve

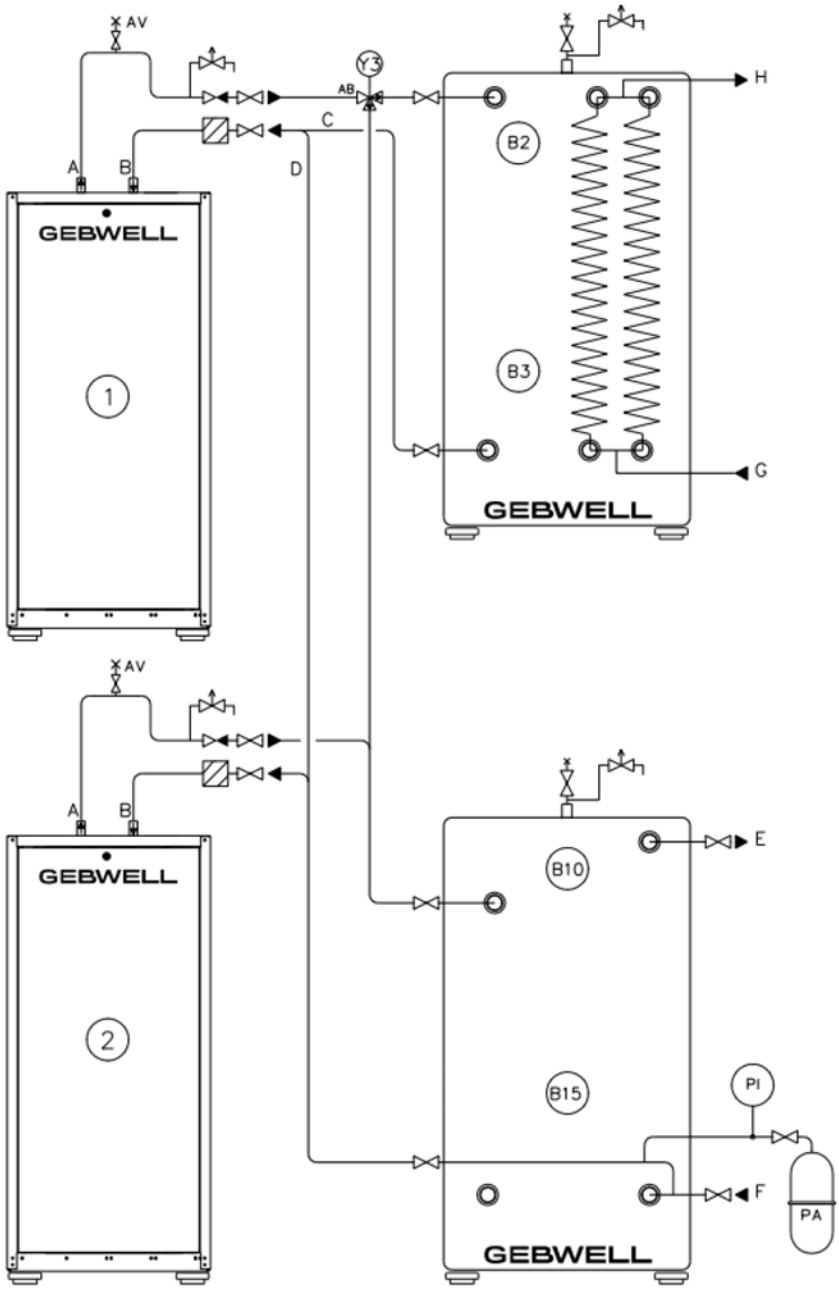

1	Heat pump
2	Heat pump
3	Domestic hot water accumulator
4	Heating accumulator
A	Charging circuit supply, heat pump
B	Charging circuit return, heat pump
C	Charging circuit return, domestic hot water accumulator
D	Charging circuit return, heating accumulator
E	Heating circuit supply
F	Heating circuit return
G	Cold water supply
H	Domestic hot water
AV	Air extractor

Figure 6.7 Example of piping layout, cascade system

Expansion tank

The heat collection circuit must be equipped with an expansion tank. Pressurise the collector to at least 0.5 bar (0.05 MPa). The expansion tank should be dimensioned according to the collector's volume. Depending on the system, the collector's operating range is usually between -10°C and +20°C. The air bump in the expansion tank should be 0.5 bar (0.05 MPa), and the safety valve's opening pressure should be 3.0 bar (0.3 MPa)

Passive cooling

Passive cooling works best when heat collection is arranged using a bored well. During the summer, loops installed in the soil or in lakes may be at such a high temperature that the required cooling power cannot be obtained. The air within the collector should be allowed to rise freely to the expansion tank. Venting should always take place at the highest point in the collector. If it is necessary to connect the cooling radiator to the highest point in the circuit, venting should take place via the radiator.

Cooling can be controlled or regulated using a cooling accessory available for the heat pump. Building automation or ventilation machines can also control the heat pump's internal source pump. See the electrical diagrams for instructions.

6.3 Heat conduction circuit

The heating system adjusts the indoor temperature using the heat pump's controller and a secondary circuit, such as radiators, underfloor heating, ventilation and convector fans.

Installation

- Before installing the heat pump, flush the piping in the building's heating system to remove any impurities that may remain after installation.
- Install the required protective devices, gas separators, strainer, shut-off and non-return valves. The shut-off valves must be installed as close to the heat pump as possible.
- The heat pump should be installed in a closed heating system with a diaphragm expansion tank. The expansion tank must be dimensioned according to the water volume and system temperature in the specific building.
- Make sure that the top of the heat pump and the electrical equipment are entirely free of water during operation.
- Protect the heat pump from overpressure with a safety valve. The opening pressure of the safety valve can be a maximum of 0.6 MPa (6.0 bar), and it should be installed in the **return pipe** of the heating system. It is advisable to lead the safety valve overflow pipe to the nearest floor drain. The overflow pipe should be installed in such a way that water can flow out of the overflow pipe unobstructed. Do not plug the safety valve.
- The safety valve must not be installed between heat pump's heat exchanger and protective components of the secondary circuit without piping the safety valve to discharge outside the building.

Safety valves should be installed on the return pipe to the heat pump or below the halfway mark on the accumulator.

- If you connect the heat pump to a heating system without a buffer tank, take note of the minimum flow required by the heat pump in a system equipped with thermostats. If the device is connected to a system equipped with thermostats, bypass valves should be installed in every radiator (loop), or a few thermostats should be removed to ensure an adequate flow rate. If the minimum flow does not occur, the heat pump's operation will be affected, reducing its efficiency and possibly resulting in a fault alert. See the device-specific minimum flow in section **12 (Technical specifications)**.

1 Heat pump
A Charging circuit supply, heat pump
B Charging circuit return, heat pump
C Charging circuit return, domestic hot water accumulator
D Charging circuit return, heating accumulator

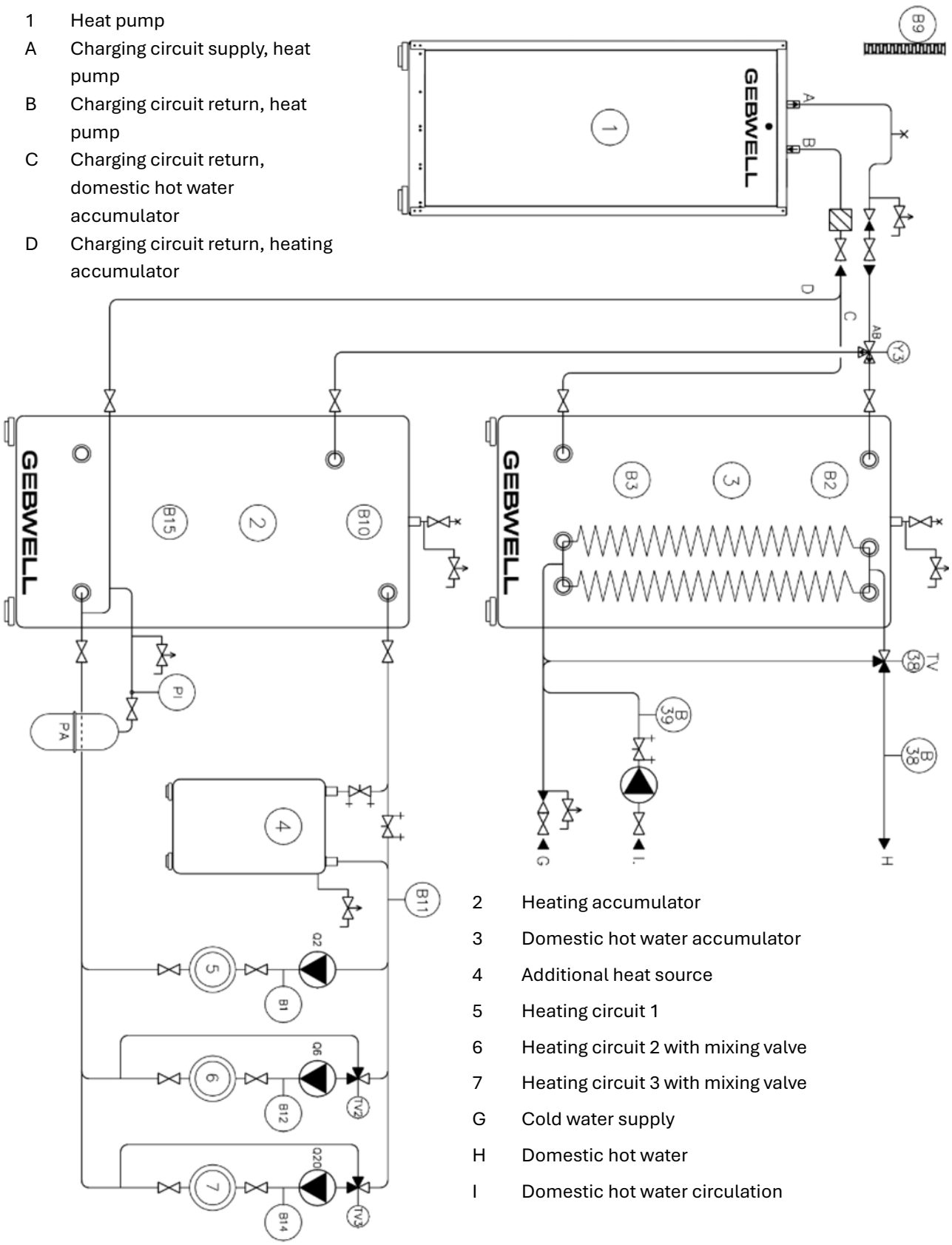

2 Heating accumulator
3 Domestic hot water accumulator
4 Additional heat source
5 Heating circuit 1
6 Heating circuit 2 with mixing valve
7 Heating circuit 3 with mixing valve
G Cold water supply
H Domestic hot water
I Domestic hot water circulation

Figure 6.8 Example connection of the charge circuit

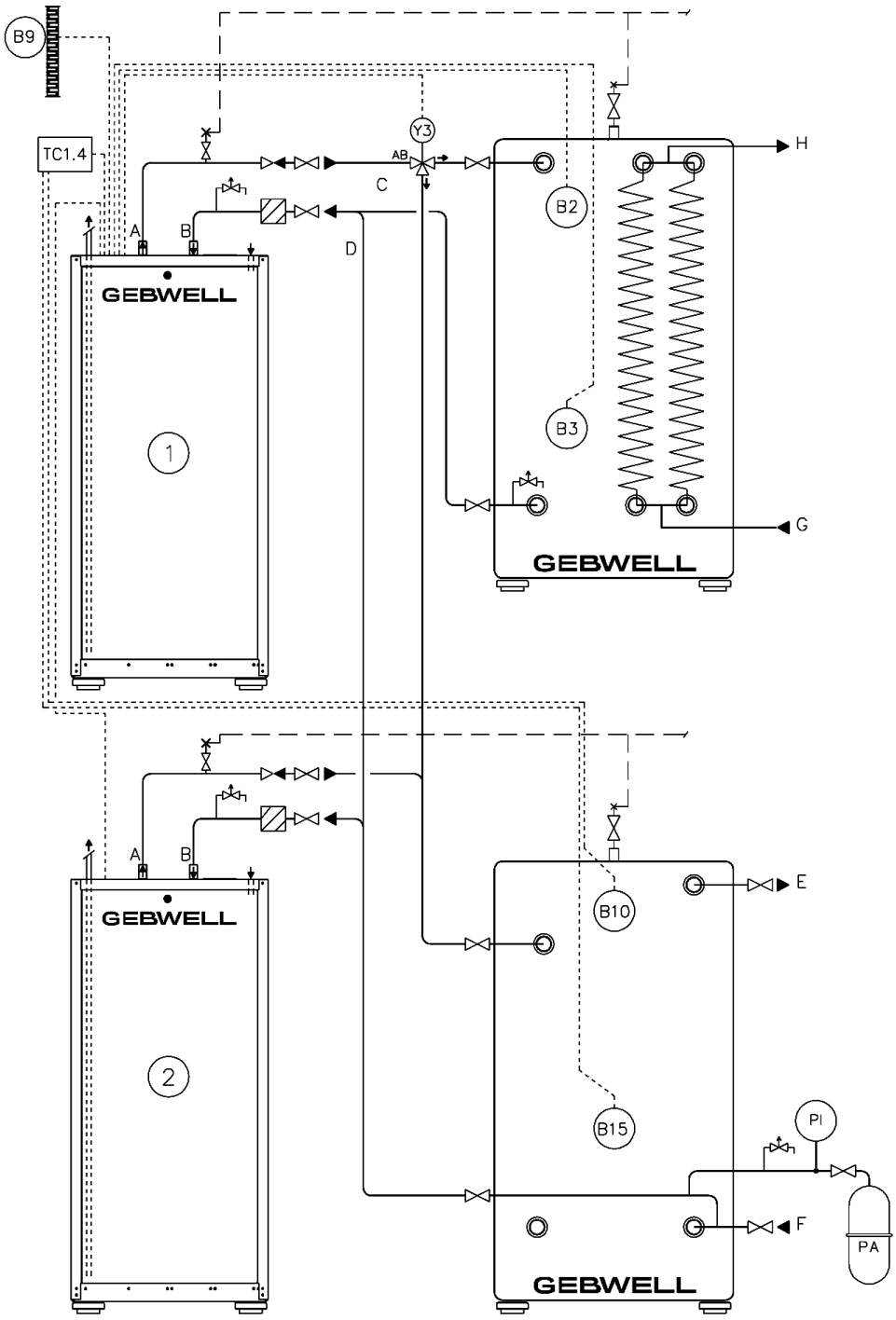

Figure 6.9 Connecting the charge circuit, cascade

1	Heat pump	D	Charging circuit return, heating accumulator
2	Heat pump	G	Cold water supply
A	Charging circuit supply, heat pump	H	Domestic hot water
B	Charging circuit return, heat pump	TC1.4	Cascade/additional heat control module
C	Charging circuit return, domestic hot water accumulator		

6.4 Domestic hot water system

Follow the HVAC industry guidelines when installing the domestic hot water system. Install the required valves, safety devices and protective devices according to the instructions for each component. The heat pump can produce water above 75°C, so pay attention to the control devices in the domestic hot water system during installation. The safety valves should be selected according to the system and the hot water accumulator's requirements.

The hot water temperature can be set in the control menu under DOMESTIC HOT WATER.

6.5 Refrigerant safety valve

The discharge line from the refrigerant safety valve to the outside of the machine room should be installed with a slight downward slope as propane is heavier than air. The amount of bends in the discharge pipe should be minimized to reduce pressure losses. The ventilation fan should be installed outdoors whenever possible; if this is not feasible, it must be placed as close to the exterior wall as possible. Do not route the refrigerant safety valve discharge pipe into the heat pump's ventilation duct or under the same weather cover as the ventilation outlet.

Refrigerant safety valve must be installed according to EN 13136 standard.

1 heat pump:

35 mm diameter; 20 m length of the pipe

42 mm diameter; 50 m length of the pipe

2-3 heat pumps installed parallel:

54 mm diameter; 50 m length of the pipe

4-7 heat pumps installed parallel:

65 mm diameter; 50 m length of the pipe

7 Electrical connections

The electrical components of the heat pump contain a life-threatening voltage.

Before opening the protective cover of the control panel or the compressor module, switch off the unit using the main power switch.

Remove all sources of ignition from the area before starting work.

Use only spark-free tools and clothing during the work.

The electrical installation must be carried out by a certified electrician, and the system must be connected as a separate circuit.

Never compromise safety by bypassing protective devices.

Use only correctly rated fuses (with the appropriate tripping current) in locations where a fuse is required.

Wiring work may only be carried out by a certified electrician.

The warranty does not cover defects caused by circumstances beyond the control of the warranty provider, such as excessive voltage fluctuations, lightning, fire, or accidents, nor by repairs, maintenance, or structural modifications carried out by parties other than authorized dealers.

The heat pump should be connected to a 400 V (50 Hz) electricity network. The standard accessories supplied with the heat pump and any electrical accessories must be installed and connected when the device is installed. The device requires a neutral cable in order to operate.

The following standard electrical accessories are supplied with the heat pump:

- Outdoor temperature sensor (B9)
- Upper sensor of the domestic hot water accumulator (B2)
- Domestic hot water accumulator lower sensor (B3)
- Heating accumulator upper sensor (B10)
- Additional heat control sensor (B11)
- Heating accumulator lower sensor (B15)

The electrical diagrams show the complete connections for each heat pump model. Take note of the following matters during electrical installation:

- Switch the heat pump off before testing the building's insulation resistance.
- Ensure the heat pump's protective device corresponds to the electrical design, with a rated operating current in accordance with section **12 Technical specifications - Electrical specifications)**.
- Electrical accessories should be connected to the terminal box on top of the heat pump.
- Do not install sensor or data transmission cables near power lines.
- This could result in incorrect measurement data and malfunctions.
- When connecting the temperature sensors, the order of the wires is irrelevant.

Holes in multi-flanges must only be made by puncturing to preserve their tightness.

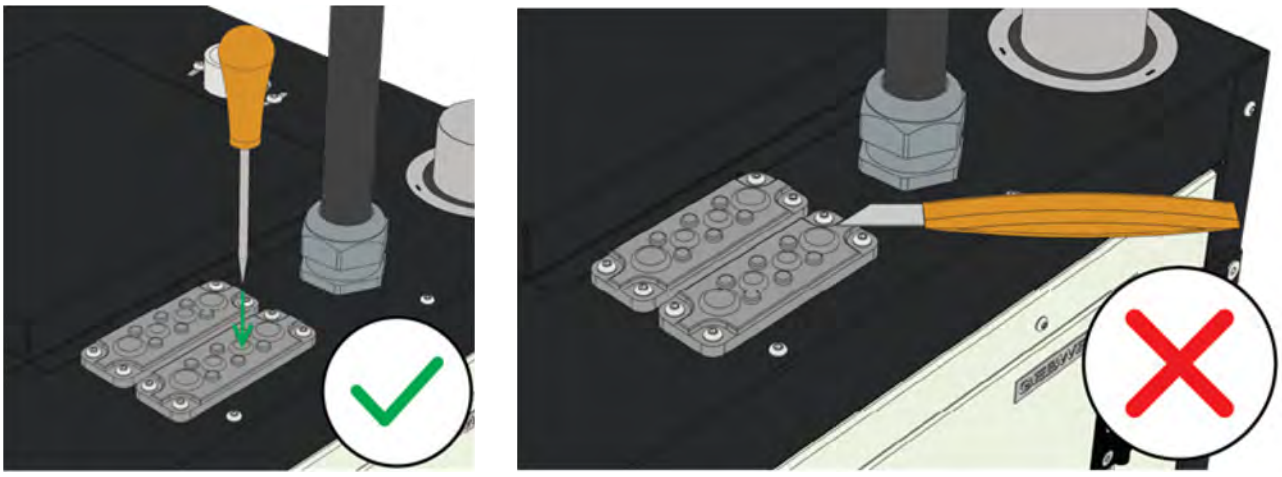

Figure 7.1 Handling of the multii-flange

Once the cable is in place, pull it back gently until you feel the grommet seal snap back into its original raised position. This ensures a tight and mechanically secure installation (**Figure 7.2**).

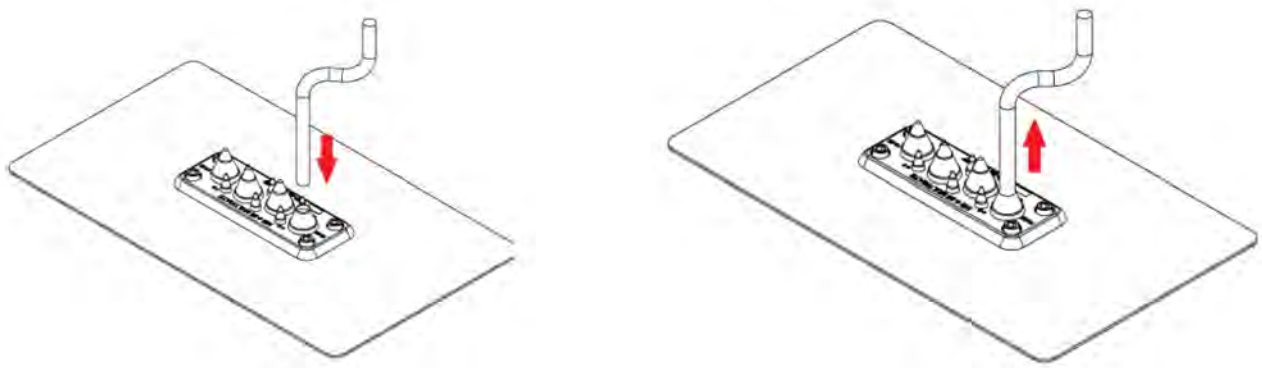

Figure 7.2 Installing cable to multi-flange

The heat pump has a frequency converter, which protects the compressor electrically from overload and overcurrent by limiting the compressor's speed. If it detects an anomaly in the electricity quality that could affect the compressor's operation, the compressor stops, and the frequency converter activates an alert.

The heat pump comes with electrical energy metering. The electrical energy meter reads the electrical energy consumed by the device in an instant and collects data on the cumulative consumption. The heat pump's automation system itemises the consumed electrical energy according to the operating mode with separate domestic hot water, heating and heating counters.

7.1 Connecting the power supply

Do not switch on the heat pump until the collector and charging circuits have been filled with brine and water. Otherwise, the pump, compressor, or protective devices may be damaged.

The electrical cable entries of the heat pump are located on the top of the unit, as shown in **Figure 7.3**. The cables are connected to the heat pump through the front door. Connect the power supply, circulation pumps, and sensors according to the electrical diagrams. Ensure proper strain relief of the cables by carefully tightening the cable glands.

1. Power supply cable: M50 cable gland
2. Power supply cables for the collector and charging pumps: two M20 cable glands
3. Sensor wiring: multi-flange entry
4. Router wiring: entry for RJ45 cable. In single heat pump systems, the router is pre-connected.

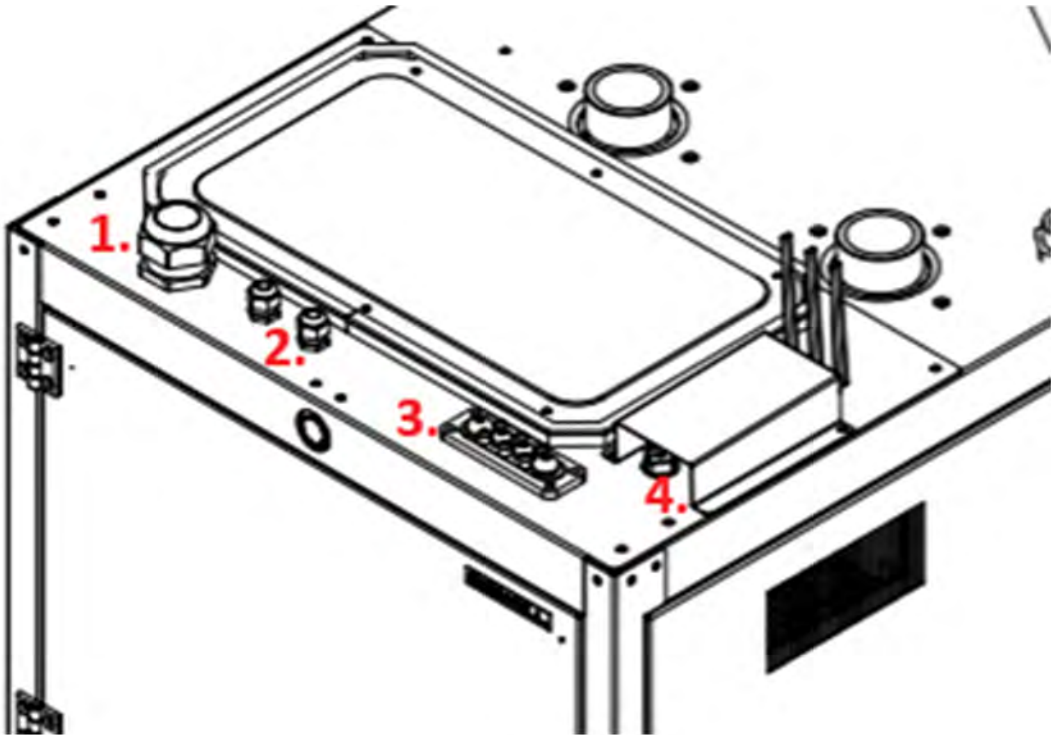

Figure 7.3 Electrical connection box and power supply cable wiring

7.2 Connecting external circulation pumps

Connecting an external brine circulation pump

The brine circulation pump is installed externally from the heat pump. When using the standard pump designated for the heat pump, both the power supply and control signal are provided directly from the heat pump. The connection is located on top of the unit inside the wiring connection box.

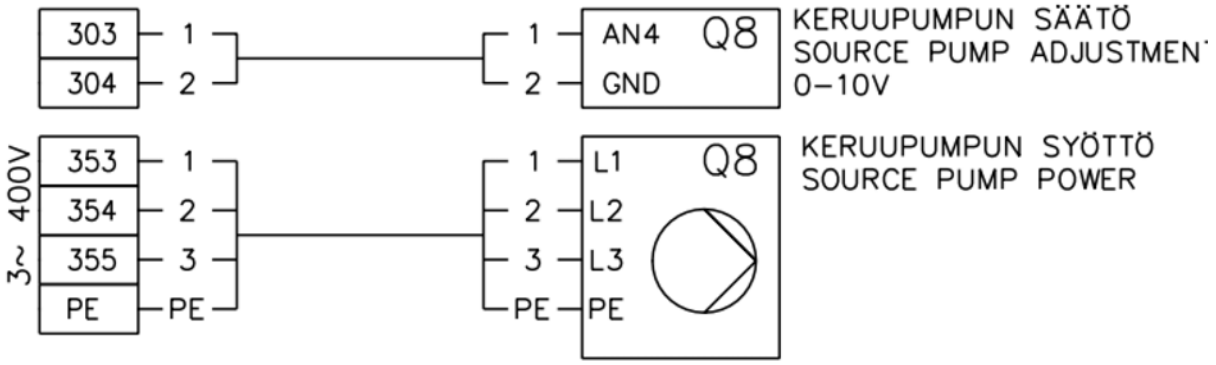

Figure 7.4 Standard brine circulation pump is Kolmeks L-50D/2MDG 2,2 kW 4,4 A

Regardless of the brine circuit pump type, the control signal always originates from the heat pump.

In cascade systems with multiple heat pumps, the external brine pump receives its power supply from the group distribution board, while control and regulation signals are provided by the cascade extension module. (TC1.4)

When using other external pumps, their power supply must be arranged from the building's distribution board.

Connecting an external brine circulation pump

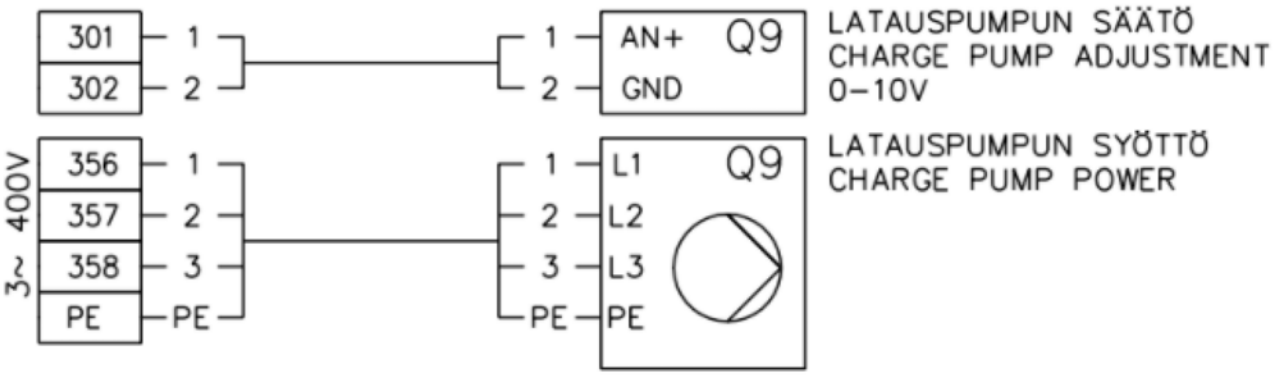

Figure 7.5 Standard charging circuit circulation pump is Kolmeks L-50A/4MDG 0,9 kW 3,7A

When using other external pumps, their power supply must be arranged from the building's distribution board.

7.3 Building a LAN

The delivery includes a router located on top of the heat pump. The cascade system is supplied with an external network switch box which includes the router, power supply and network switches through which the devices are interconnected. The network switch box must be connected to its own power supply (socket 1~230 V/50 Hz).

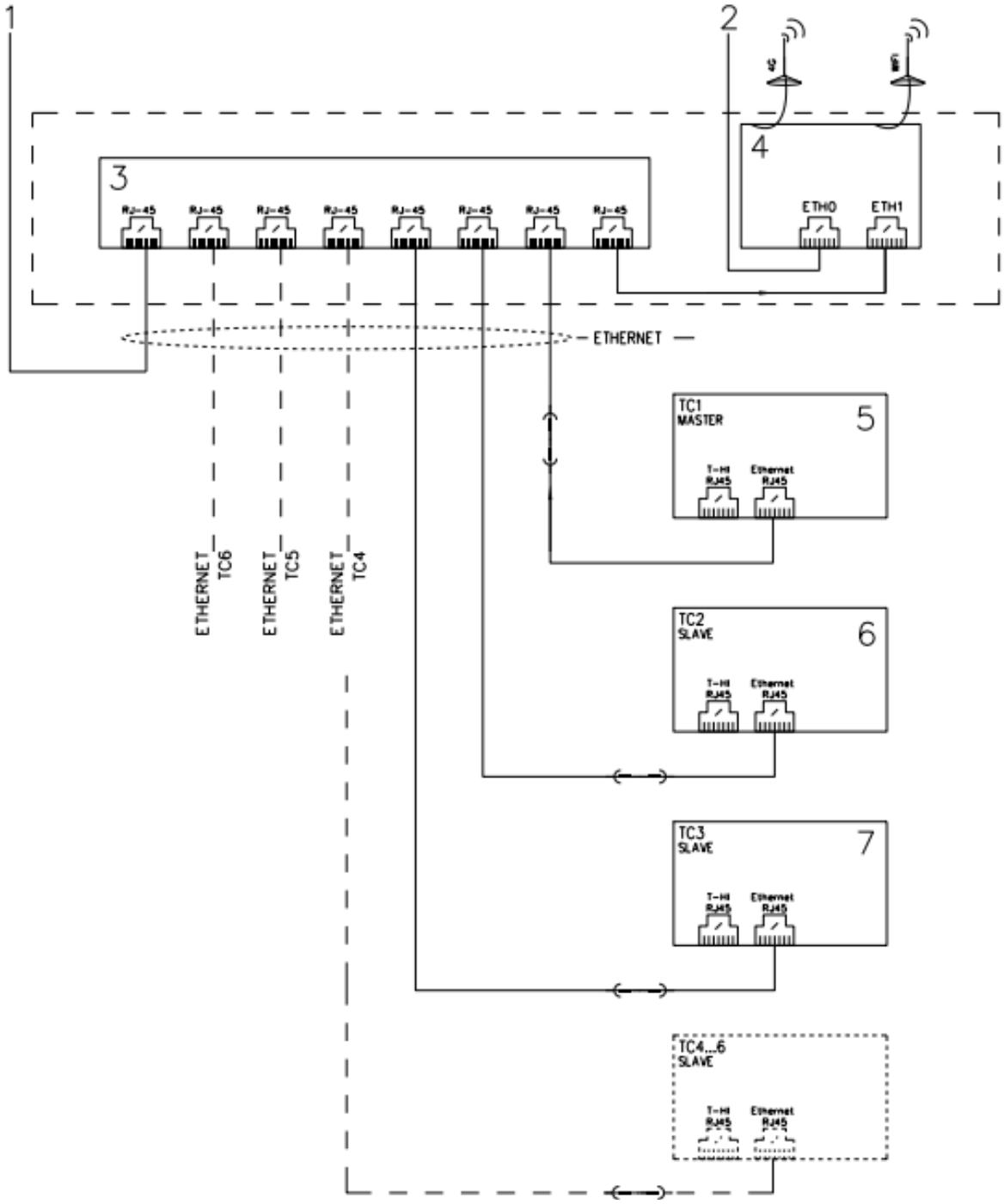

Figure 7.6 Network switch box

1	BAS	5	Master device
2	Customer’s internet	6	Slave device
3	Network switch	7	Slave device
4	Router		

7.4 Connecting a cascade system

You can connect several heat pumps to create a single cascade system. A cascade system is a system of several heat pumps connected in series or parallel where the master device manages the common heating and cooling demand. Define one device as the master and the others as slaves. Assign each slave device its own unique device address. The system communicates via a local network and does not require a separate cascade bus cable.

Connect all the external sensors to the master device. Device-specific change-over valves, controls, alerts and Modbuses are connected to each device.

7.5 Connecting the heat pump to a building automation system

Heat pumps can be connected to a building automation system via a TCP/IP bus using a network switch box (optional accessory) or via a ModBus RTU bus, which requires the POL902.00 communication module (optional accessory).

TCP/IP connection

Connect the ethernet cable to the network switch box as shown in Virhe. Viitteen lähdettä ei löytynyt.

RTU connection

Connect the Modbus cable to the ceiling connection box as shown in the electrical diagrams. Set the slave address, baud rate, parity and stop bits on the heat pump controller.

Temperature sensors

The heat pump is supplied with standard temperature sensors, and accessories are supplied with their temperature sensors. The temperature sensors are connected and commissioned according to the system. Not all temperature sensors are required in all applications. Refer to the system diagram for the list of sensors at the specific site.

Connection -> heat pump:

Outdoor temperature sensor (B9)

Upper sensor of the domestic hot water accumulator (B2)

Domestic hot water accumulator lower sensor (B3)

Connection -> expansion module TC1.4 (external accessory)

Cascade sensor (B10)

Additional heat control sensor (B11)

Heating accumulator lower sensor (B15)

7.6 Domestic hot water accessories

Domestic hot water electric heater

The heat pump can control the reserve/additional heat of the domestic hot water. The power supply to the domestic hot water electric heater comes from the building's group switchgear. The group switchgear should be equipped with a control contactor, indicator light and manual switch. The heat pump controls the electric heater's contactor at the heat pump's control voltage (230 V/50 Hz). Refer to the connection instructions.

Change-over valve

When the heat pump is heating domestic hot water, the system must have a change-over valve. The change-over valve controls the flow of charge water into the domestic hot water accumulator or heating system. The change-over valve is controlled by a single-point control to turn the valve to the DOMESTIC HOT WATER position. Control voltage 230 V/50 Hz. A spring returns the valve back to the heating position when the control is removed. A cascade system can have two domestic hot water producers. The change-over valve is connected to the specific heat pump that produces the domestic hot water.

Refer to the connection instructions. The change-over valve is automatically used when the domestic hot water function is activated.

Superheating accumulator

A superheating accumulator is used in systems where the domestic hot water is post-heated (primed) by an electric heater. The accumulator is equipped with an electric heater and a temperature sensor. The heater heats the water and keeps the temperature in the accumulator at the desired level, ensuring that the domestic hot water is sufficient.

Cooling transfer pump

Power supply to the primary cooling circuit's transfer pump from the building's group switchgear. Pump control from the heat pump (230 V/50 Hz). Refer to the manual for the selected pump for control mode. The control mode may vary depending on the pump model. Equipment in the group switchgear as required by the pump.

Connecting expansion modules

All expansion modules added to the controller are supplied in a module hub that must be installed outside the device. The hub should be installed on a wall in the technical room near the heat pump. The power supply to the module hub and the bus are connected to the connection box on top of the heat pump. All field devices associated with an expansion are connected to the module hub according to the connection instructions.

Module-specific connection instructions in the appended electrical diagram and delivered with the module hub.

© 2025 Gebwell

7.7 Connecting the ventilation air extractor

The ventilation air extractor is installed in each G-Eco system. The ventilation air extractor can be cascade-controlled in systems containing several devices. **The extractor should be commissioned first when installing the device.**

The power supply to the ventilation air extractor comes from the building's group switchgear. Refer to the technical specifications for the device model to see its electrical data.

The ventilation air extractor is controlled by the heat pump. Connect the control to the heat pump's connection box according to the connection instructions. The ventilation air extractor control is reversed: in the absence of a signal, the extractor fan operates at full power.

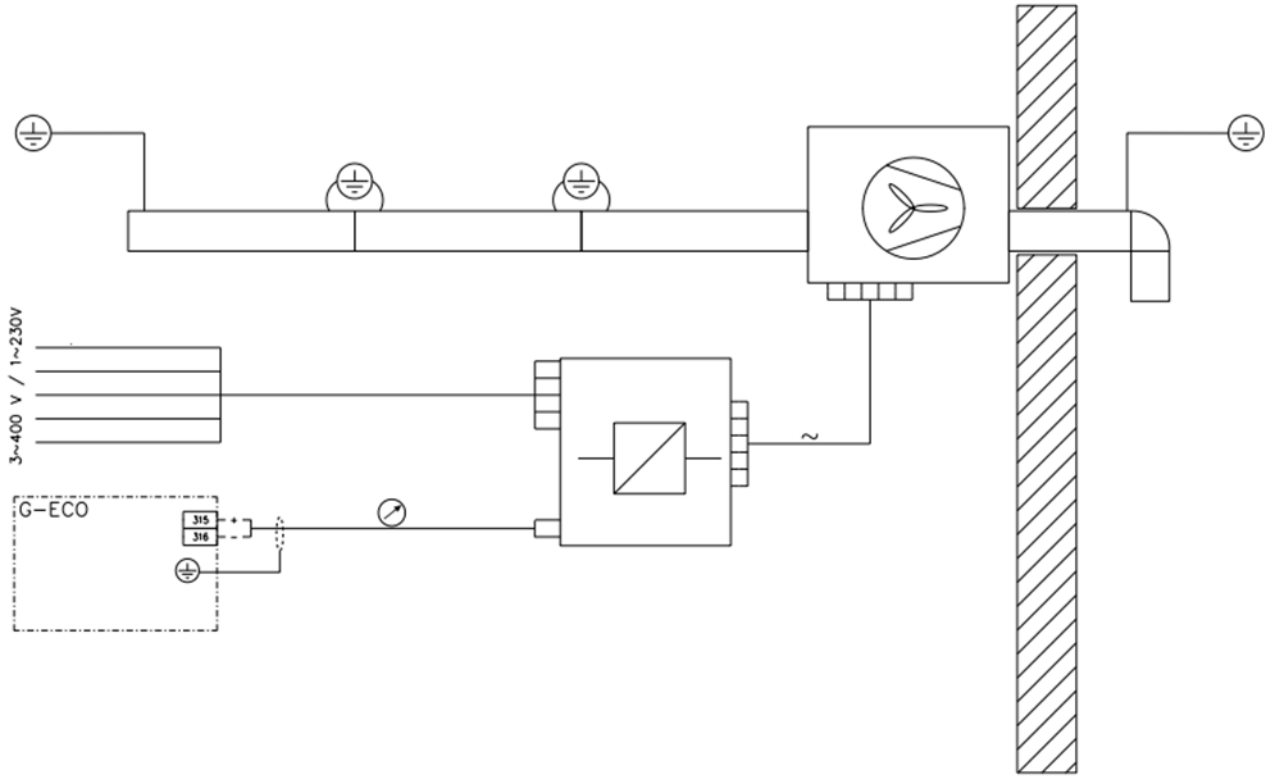

Figure 7.7 Ventilation air extractor, circuit diagram

8 Starting up the heat pump

The initial commissioning of the unit must be carried out by the system installer or a qualified specialist authorized by them.

The heat pump is not intended for use by persons with reduced physical or mental capabilities, sensory impairments, or lack of experience and knowledge, unless they are supervised or instructed in its use by a person responsible for their safety.

Children must not play with the unit or carry out cleaning or maintenance operations.

The compressor must be heated before the first start-up. Before starting up, the crankcase heater must be on for at least 8 hours, or the oil temperature must be at least 20°C. To start the compressor heater, put the unit in COMPRESSOR HEATING mode in the operating mode menu. In Compressor Heating mode, only the heater starts up – no other device is activated. Set the device to AUTO to start it up when the compressor temperature reaches the setpoint.

The G-Eco Pro has an internal crankcase heater. When the device is in AUTO mode, the controller uses data from the crankcase temperature sensor to verify that the compressor is at the right temperature. The ambient temperature affects the heating time.

If the unit does not reach the correct crankcase temperature within 300 minutes (5 hours), a low-priority alert (class B) is activated. The compressor starts up automatically when the oil reaches the correct temperature.

8.1 Filling and venting

Filling and venting the heating system

1. Make sure the system is checked for tightness.
2. Open the venting and exhaust valves to allow air out of the system during filling.
3. Fill the charge/heating circuit using the system's filling valve.
4. Close the venting and exhaust valves when no more air comes out of them. The pressure starts to pick up after a few minutes.
5. Close the filling valve when the pressure is at the correct level.
6. Carefully vent the system using the venting valves.
7. Repeat the filling and venting process until all the air is removed and the pressure is correct.

Filling the collector

1. Ground source heat applications: Fill the collector with a mixture of water and geothermal fluid that can withstand a temperature of -15°C. Other applications: Fill the collector with a fluid that is frost-resistant to 5°C less than the lowest collector temperature during operation.

The brine solution must contain a corrosion inhibitor!

2. Fill collector from valve C (both open). Valve B must be closed during filling so the brine circulates through the entire circuit. If the collector is large, it may be easier to vent through the bypass valve in the technical space while the brine circulates through the entire circuit.
3. Fill the system with pure geothermal fluid. Take care to ensure that no debris from the base of the container passes into the suction hose (strainer). If you circulate the fluid with an external filling or venting pump, make sure that the fluid is not pumped into the system as a foam. It might be difficult to get foamy microbubble liquid out of the system, and it can cause malfunctions. You can prevent microbubbles from entering the collector by using two large containers.
4. Clean strainer A before pressurising the system. Pressurise the collector using an external booster pump. Monitor the collector's pressure gauge to ensure the pressure does not exceed the safety valve's opening pressure.
5. Clean the heat pump's strainer before the heat pump is started.
6. If the strainer contains debris after venting, repeat the cleaning of the filter after a few hours of operation.

The collector can also be vented in two stages. A bypass valve (C) must be installed in the collector so that the internal piping can be vented separately from the well field. When pumping into a well field, air mixes with the cold brine, making it more difficult to remove the air. Valve C must be closed during normal operation.

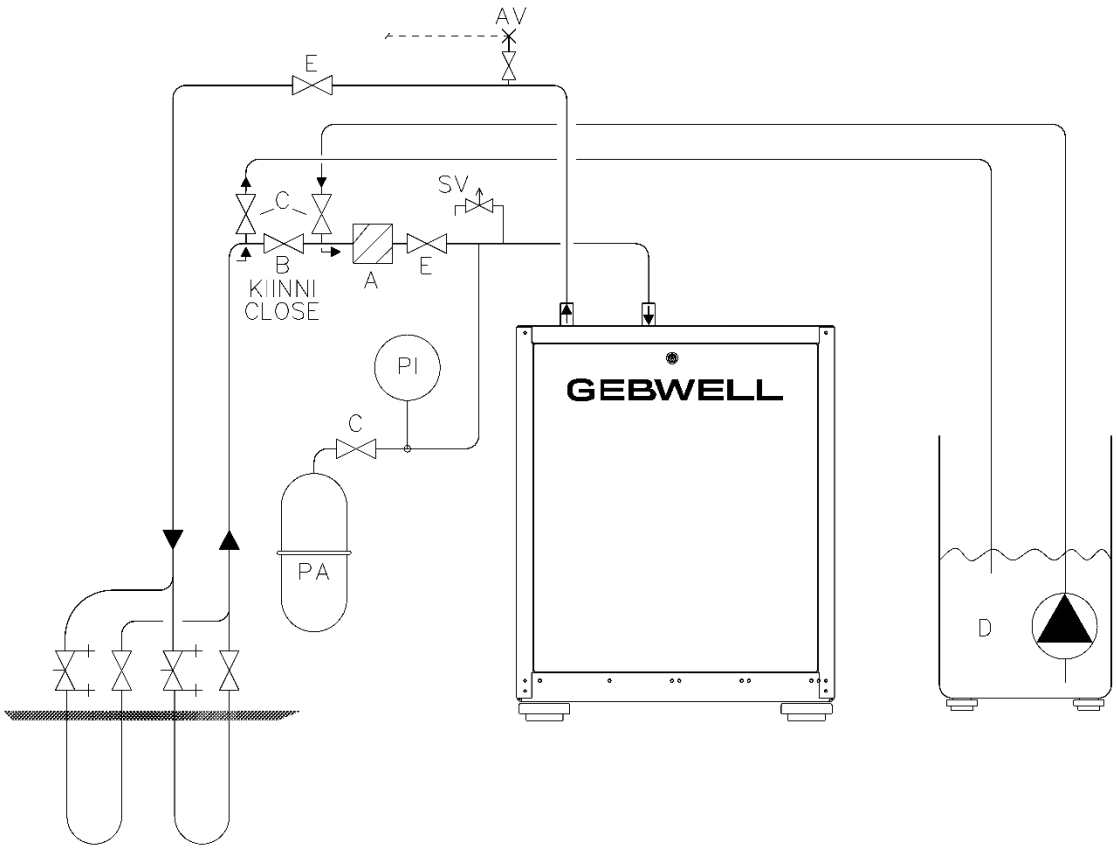

Figure 8.1 Venting the collector

A	Dirt separator	E	Shut-off valve
B	Shut-off valve	AV	Air extractor
C	Shut-off valve	SV	Safety valve
D	Filling container		

Pressure-testing the collector

1. Perform a pressure test on the filled collector as follows:
2. Increase the pressure to the design pressure and check the pressure after 30 minutes. If the pressure drops during these 30 minutes, there is a leak in the system.
3. Repair any leaks and repeat the pressure test.
4. If the test is successful, record it as completed in the Commissioning Record.

8.2 Checks before starting up the heat pump

When the heat pump is delivered, all of the operational switches will be in the OFF position. Verify the following before specifying the configuration and starting up the heat pump:

- The collector is filled.
- The heat pump's charge circuit is filled.
- The charge circuit and collector have been thoroughly vented.
- The external temperature sensors have been installed and connected to the system according to the electrical diagram.
- The electrical connections are correctly connected.
- Negative-pressure ventilation is working.
- The compressor is heated. Before starting up, the crankcase heater must be on for at least 8 hours, or the oil temperature must be at least 20°C.

Venting the charge circuit and collector using the device's built-in pump

After venting the system with external equipment, the venting can be finished using the heat pump's built-in pumps. The collector, in particular, must be vented with extreme care. If there is even a small amount of air in the collector, the device will not operate optimally and may malfunction.

Start the pumps by selecting Test functions under the service menu in the controller's user interface. Access the service options by holding down the knob for 3 seconds and entering the code 2000.

Charge circuit

The charge pump is used to vent the charge circuit. Select Charge pump and increase the pump's rotation speed to facilitate venting.

Collector

The source pump is used to vent the collector. Select Source pump and increase the pump's rotation speed to facilitate venting.

Start at low power and slowly increase the rotation speed.

Be sure to return all the components to ***Auto***-mode after the venting process. Otherwise, the heat pump will not operate correctly.

8.3 Hardware configuration

The system must be configured before start-up.

1. Ensure the expansion modules are installed and their DIP switches are set.
2. Ensure all the electrical connections are made.
3. Access the service options by holding down the knob for 3 seconds and entering the code 2000.
4. Set the hardware configuration under Service menu ► Commissioning.
5. Restart the system under Service menu ► Commissioning.
6. After the system restarts, check the hardware configuration from the same menu.

8.4 Starting the heat pump for the first time

1. Put the heat pump's main switch (Q1) in the ON position.
2. Set the other switches to ON:
    - Source pump (F2)
    - Charge pump (F3)
    - Control (F10)
3. Wait a moment until the controller starts.
4. If you are not in the service menu, access it by holding down the knob for 3 seconds and enter the code 2000.
5. Set the **Operating mode HMI** to Auto. MAIN MENU -> DEVICE -> HEAT PUMP OPERATION -> AUTO-STOP-BACKUP HEATCOMPRESSOR HEATING.
6. The heat pump will start calculating the necessary heating and begin charging as required. If domestic hot water was selected for the system, charging begins there first.
7. If there is no need for heat in the property, perform a test run by increasing the temperature setting under the Heating circuit menu or from the external automation system.
8. You can increase the setting under **Setpoint room**. Refer to the section **Heating circuit settings**.
9. After a test run, set the heating and domestic hot water settings to suit your building's needs.

Operating without a collector

You can use the heat pump to control external heat sources before connecting the collector. In this case, heating is provided by electric heaters in the heating and domestic hot water accumulators. All the control functions for heating and domestic hot water are available. However, the heating and domestic hot water circuits should be connected and vented, and the electrical connections should be completely ready for use.

The electric heater controls must be connected to the heat pump control.

To use the heat pump without a collector, set the **Heat pump operating mode** setting

to **Reserve heat**. In this mode, the compressor (K1) and source pump (Q8) will not start up. Note that the Note that the ventilation air extractor must also be installed and operational in this case.

9 Heat pump settings

9.1 Controller user interface

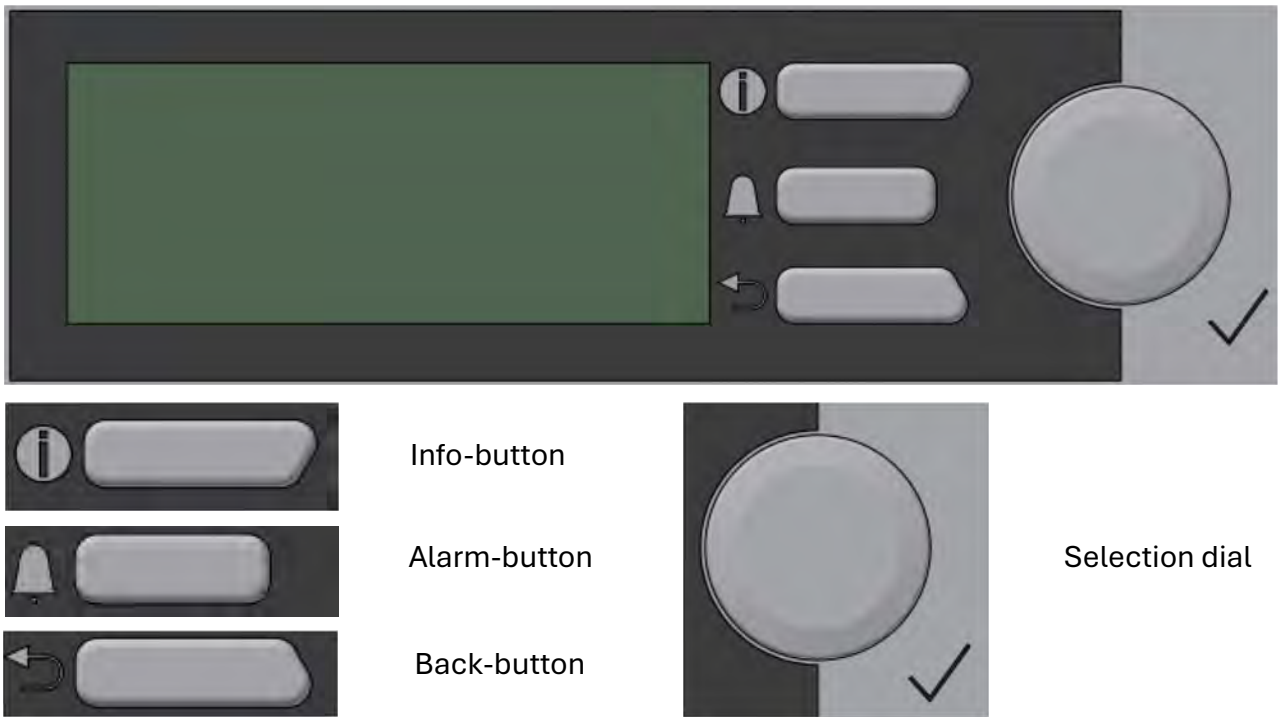

Figure 9.1 Controller user interface

9.2 Basic heat pump settings

Some settings can only be changed in the service menu. Access the service options by holding down the knob for 3 seconds and entering the code 2000. Refer to the section User interface menu structure to see where the settings are located in the heat pump's user interface.

Before you change any setting, make sure you understand how the change will affect the system's operation.

The basic settings are in the **Heat pump** menu.

Time and date

In order for the heating programme to work as intended, the year, date, and time of the controller clock must be set correctly under System time.

The heat pump will not start up until the time and date have been set.

Language selection

You can change the user interface language under **Main menu ▶ Heat pump ▶ Language selection**. The heat pump's default language is Finnish.

The language options are **Finnish**, **English**, and **Swedish**.

Heat pump operating mode

You can start up the heat pump under **Main menu ▶ Heat pump ▶ Heat pump operating mode**. When delivered from the factory, the device is in the **Off** mode. When you set the mode to **Auto**, the heat pump automatically starts heating the domestic hot water and heating water as required.

9.3 Domestic hot water system settings

The heat pump produces domestic hot water, controlled by the change-over valve. When the domestic hot water request is activated, the change-over valve turns to the domestic hot water accumulator and charging starts. The heat pump charges the domestic hot water according to the setpoint and returns to the heating position. If heating is active, the charging continues to heat the building.

The domestic hot water accumulator has two temperature sensors: B2 in the upper part is a measuring sensor, and B3 at halfway or below is a controlling sensor. Domestic hot water charging starts when the value measured by sensor B3 is less than the difference between the setpoint and the charge hysteresis. Charging ends when the setpoint is reached.

The **Main menu ▶ Domestic hot water** menu shows the following information:

- Mode: indicates the domestic hot water charging mode
- Domestic hot water operating mode: the selected operating mode.
- Tank upper temp.: the temperature in the upper part of the domestic hot water accumulator (sensor B2)
- Tank lower temp.: the temperature in the lower part of the domestic hot water accumulator (sensor B3)
- Change-over valve: the controlled position of the change-over valve
- Circulator pump: the status of the domestic hot water circulator pump.

Domestic hot water setpoints

You can set a functional shutdown point for the domestic hot water in three different operating modes: **Normal** is the basic domestic hot water level, **Comfort** is the higher domestic hot water level, and **Eco** is the reduced domestic hot water level.

The controller alters the operating mode according to the schedule in the weekly calendar. The heat pump's default mode is **Comfort**.

Legionella function (Main menu ▶ Domestic hot water ▶ Legionella)

The Legionella function uses the electric heater to raise the temperature of the water in the domestic hot water accumulator to a set temperature once a week. This prevents the growth of Legionella bacteria in the domestic hot water. Legionella charging is performed using the compressor or electric resistance controls. Schedule the function for a time when there is no expected load on the domestic hot water supply.

- **Setpoint**: the temperature to which the heat pump will charge the domestic hot water (the factory setting is 55°C)
- **Legionella mode**: the weekday on which the charge is performed
- **Start time Leg. function**: the time at which charging starts.

9.4 Heating circuit settings

The heat pump controller is capable of controlling three heating circuits. You can configure the settings for each circuit individually in the **Heating circuit 1**, **Heating circuit 2**, and **Heating circuit 3** menus. A circulator pump, mixing valve, supply temperature sensor and room temperature sensor can be selected for the heating circuit. If you use two or three heating circuits, circuit 1 should always have a higher temperature than the others. The pump heating circuit must always be the highest-temperature circuit.

Heating circuit 1 is typically an uncontrolled pump heating circuit in a standard configuration for the heat pump controller. An external circulator pump can be installed in heating circuit 1. Expansion module TC1.2 is required to select circuit 1 as the control circuit.

Heating circuits 2 and 3 are mixing heating circuits available as accessories. They can be used to adjust to a lower temperature. Mixing circuits can handle heating networks that operate with different heating curves in the same building**. Expansion module TC1.2** is required to access the functions of **heating circuits 2 and 3**. The circuits should be enabled under Configuration in the service menu.

Heating circuit status shows the status of the heating circuit. The heat pump's controller controls the heating circuits according to the setpoints and formulates the setpoint for the heat pump according to the highest heat request. The heat pump charges the heating accumulator or network, depending on the device configuration, to reach the setpoint temperature. The mixing circuits adjust individually to keep the supply water temperature at the setpoint.

Room temperature and room temperature sensor compensation

If the system includes a room temperature sensor:

Under **Main menu ▶ Heating circuit 1–3 ▶ Operating mode**, you can set two different values for the room temperature: **Comfort** is the basic heating level, and **Eco** is the reduced level that is activated during the scheduled drop-off period. **Current** indicates the heating circuit's present temperature setting.

The room temperature sensor must be installed in a central part of the building in order for adjustment to function optimally. If the heating circuit does not have a room temperature sensor, you should disable the sensor in the service menu. In this case, the controller uses a 20°C reference value to control the heat.

The **Main menu ▶ Heating circuit 1–3 ▶ Settings ▶ Room sensor comp.** setting allows you to determine how much the room sensor compensation affects the supply water setpoint. The higher the value, the greater the effect. If you set the value to **0**, the room temperature sensor acts only as a measuring sensor and does not affect the control of supply water.

Main menu ▶ Heating circuit 1–3 ▶ Settings ▶ Room effect indicates the compensation effect of the room sensor on the flow temperature. Compensation is affected by a deviation between the setpoint and measured room temperature.

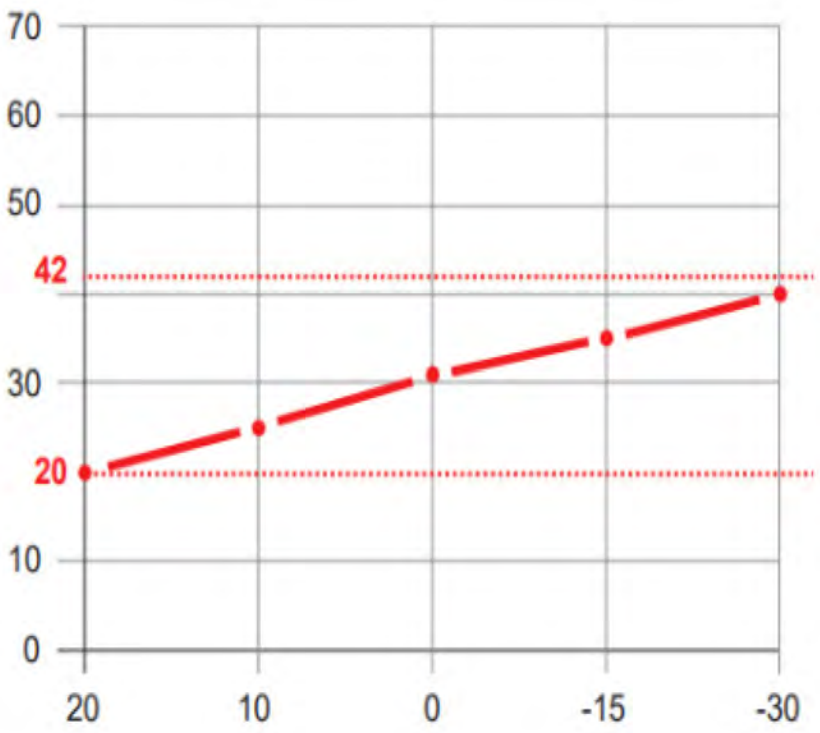

Heating curve

The heating curve is used to calculate the setpoint for the supply water temperature, and this setpoint is used to adjust the supply water temperature according to the prevailing weather conditions. Alter the curve to adjust the heating output and room temperature to your individual needs.

The heating circuit must be switched on in the device's user interface. When controlling using a heating curve, an outdoor temperature sensor (**B9**) is connected to the heat pump's controller. The heating curve is set separately for each heating circuit in the heating circuit's settings.

You can change the curve's Y-value at five outdoor temperature points (20°C, 10°C, 0°C, -15°C and -30°C). In the example figure, the X-axis indicates the outdoor temperature (°C), and the Y-axis indicates the supply water temperature (°C).

Figure 9.2 Example of a heating curve

Setpoint supply water

Upper and lower supply water limits can be set for each heating circuit. The supply water temperature remains within these limits, even if the heating curve goes beyond the setpoint.

The table shows example values for underfloor and radiator heating. If you use underfloor heating to heat wet rooms, please note the minimum temperature increase when setting the lower limit.

Heating type	Upper limit	Lower limit
Underfloor heating	40–45°C	18–20°C
Radiator heating	50–75°C Pro 120 50–75°C Pro 120 HT	15–18°C

Current value indicates the supply water temperature.

Keep in mind the heat pump's maximum charging temperature when setting the maximum network temperature. If the network requires a higher supply water temperature than the heat pump can produce, the system needs an additional heat source to raise the temperature further. The operating mode of the additional heat source must be "alongside heat pump", which allows simultaneous operation.

If there are areas in the system that you do not want to stop heating in the summer, such as wet rooms, go to the service menu and put the circuit in Winter mode.

Weekly calendar

The weekly calendar allows you to set time control for the heating circuits. Time control changes the heating circuit mode between Comfort and Eco. Note that there is a delay between temperature changes, and time control does not work on all systems.

The settings are in the service menu under **Device settings ► Heating circuit 1–3.** Configure the settings for each heating circuit separately.

Summer/winter change threshold

The Summer/winter change threshold setting allows you to specify the outdoor temperature at which the heating is switched on or off. The factory setting is 16°C. If the heating is in Auto mode, switching is automatic.

Summer/winter setting

The heating is off in Summer mode and on in Winter mode.

- Auto/temp.: the mode changes automatically according to the outdoor temperature.
- Date: the mode changes automatically based on fixed dates.
- Summer: the heating is permanently switched off.
- Winter: the heating is permanently on.

Summer/winter time constant specifies a filtered temperature time interval for measuring the change in the heating circuit.

If you choose Date as the summer/winter setting, specify the start and end date of the heating in the **Start date and End date** fields.

Reset outdoor temperature zeroes the filtered outdoor temperature.

9.5 Cooling circuit settings

The heat pump's controller can control two cooling control circuits. Circuit control requires expansion module **TC1.6**. The circuits should be enabled under **Configuration** in the service menu. A circulator pump, mixing valve, supply temperature sensor, and room temperature sensor can be selected for the cooling circuit.

The cooling circuit requires a configuration selection, i.e., how the cooling is produced. Cooling can be produced with ground source cooling by circulating heat collecting liquid through a heat exchanger, which regulates cooling in the cooling network using a mixing group. Cooling can also be produced mechanically. In this case, the mechanical cooling accessory is required.

The cooling mixing circuit manages the building's cooling networks that operate on different cooling curves. The heat pump's controller controls cooling circuits according to setpoints, keeping the supply water temperature at the setpoint. Room temperature measurements can compensate for the setpoint.

The layout of the cooling circuits should take into account the risk factors associated with humidity and dew point formation. Under no circumstances should the supply water temperature fall below the dew point limit. The heat pump's controller does not monitor the dew point in the building. If the temperature falls below the dew point, the moisture in the air condenses into water droplets on cold surfaces, which can lead to moisture damage in structures. Dew point formation on cold surfaces is always possible, so we recommend equipping cooling circuits with external dew point monitors. Dew point monitoring is not necessary if convector cooling is used because the convector collects condensation from the air and discharges it safely into the drain.

Room temperature and room temperature sensor compensation

The settings are configured in the same way as for the heating circuits.

The cooling curve is used to calculate the setpoint for the supply water temperature, and this setpoint is used to adjust the supply water temperature according to the prevailing weather conditions.

Main menu ▶ Cooling circuit 1–2 ▶ Settings ▶ Cooling curve

You can alter the curve's Y-axis at five different outdoor temperature points:

X1 = +15°C

X2 = +20°C

X3 = +25°C

X4 = +30°C

X5 = +35°C

Setpoint supply water

The settings are configured in the same way as for the heating circuits.

Ensure the limit values of the cooling unit are properly configured. Excessively low supply water temperature may cause condensation in the piping or equipment.

Summer/winter change threshold

The settings are configured in the same way as for the heating circuits.

Weekly calendar

The settings are configured in the same way as for the heating circuits.

9.6 Charge circuit settings

The settings are under **Device Settings ► Charge circuit** in the service menu.

Charge temperature difference

Charge temperature determines the difference in the temperature (dt) in the condenser between the supply and return water sensors. The permitted values range from 4 K to 15 K (the factory setting is 5.0 K). The table provides example values.

Heating type	Set point value
Underfloor heating	5–7 K
Radiator heating	7–15 K
Accumulator charge	7–15 K

Charge pump speed

You can set the minimum and maximum speed of the condenser's circulator pump, and the speed will remain within the range during charging.

The permitted values are 20–60% for minimum speed (the factory setting is 40%) and 70–100% for maximum speed (the factory setting is 100%).

Charge circuit flow measurement (accessory) and efficiency

An external flowmeter installed in the charge circuit measures the flow of fluid through the condenser. The heat pump's controller measures the flow rate and the supply and return water temperature and uses this data to calculate the amount of energy produced. The heat pump's controller adds the produced energy to the heating and domestic hot water counters depending on the

operating mode. The heat pump's controller displays the device's momentary power and cumulative energy in different operating modes.

When the flow measurement accessory is installed in the device, the controller also shows the device's efficiency. The controller displays the device's momentary and cumulative efficiency in different operating modes.

9.7 Brine circuit settings

The settings are in the service menu under **Device settings ►Collector**.

Source pump speed

You can set the minimum and maximum speed of the brine circuit's circulator pump, and the speed will remain within the range during charging. The permitted values are 50–100% for minimum speed (the factory setting is 50%) and 70–100% for maximum speed (the factory setting is 100%).

Pressure measurement: accessory

Pressure monitoring can be installed in the brine and charge circuits. Pressure monitoring requires expansion module **TC1.7**. Low- and high-pressure limits are set for the pressure transmitters, and the heat pump's automation system activates an alert if the pressure is beyond the limits. The heat pump's automation system activates a level B alert.

In addition, one pressure transmitter can be connected to the **TC1.7 module** and named freely.

Free cooling (passive cooling)

Free cooling determines the speed of the circulator pump in free cooling mode. The permitted values range from 20% to 100% (the factory setting is 100%).

Free cooling is activated by external contact data or a higher level building automation system. The service user can set the free cooling pump speed in the Collector **settings** menu.

Active/passive cooling:

Active/passive cooling is a heat pump automation feature that manages cooling production according to a setpoint provided by internal or external automation. Active cooling refers to using the compressor to produce cooling. Passive cooling is ground source cooling from the brine circuit.

Active/passive cooling requires **accessory TC1.5**.

The heat pump's automation system uses ground source cooling as the primary energy source. When the temperature or energy available from the collector is insufficient, the heat pump's automation system switches to mechanical cooling. Cooling is produced for the cooling accumulator, where sensor **B40** is the functional sensor. The heat pump's automation system controls the cooling by managing the temperature and capacity. Mechanical cooling can be provided by a single heat pump or a cascade system of multiple heat pumps.

Condensation occurs during mechanical cooling. The condensate is used according to the active configuration for domestic hot water and/or heating. If the condensate cannot be used, excess heat is discharged into the brine circuit. The discharge of condensate complies with the setpoints defined for the heat pump's automation system. To discharge the condensate, the heat pump's return water must have a heat exchanger dimensioned for the system and a three-way control valve.

The discharge of condensate is regulated according to return water sensor **B70**. Circulator pump **Q45** is designed to discharge condensate in the brine circuit and operates when the discharge mode is active. The active/passive cooling mode changes automatically based on the setpoint and temperature obtained from the brine circuit (**B42**).

If the cooling network uses water as the heat transfer fluid, a heat exchanger and a preset control circuit must be installed between the cooling accumulator and the network. The preset control circuit protects the heat transfer fluid from freezing and adjusts according to the supply water setpoint. Sensor **B43** is the functional sensor in the preset control circuit.

The heat pump's automation system controls the preset control circuit according to the setpoints. The preset control circuit's limits should be set to allow a hysteresis of at least 5 K to the freezing point of the heat transfer fluid.

9.8 Settings to prevent the collector from freezing

If necessary, activate freeze protection for the collector under **Device settings ► Electric heater ► Collector temp. limit electric heater**.

Operating mode indicates how the heater will operate.

Collector's temperature limit for electric heater operation

You can set a limit value for the incoming water temperature (**sensor B91**) in the collector under **Collector temp. limit electric heater**. Beyond the set limit, the electric heater begins to heat the charge circuit's supply water alongside the compressor.

Set the value according to the application. The factory setting is −4°C.

Power level settings

You can set the switch-on and hysteresis values for up to three power levels. You can also specify a P-value and integral time for calculating the capacity.

Flow switch (accessory)

If the system uses water as the heat collecting liquid or a liquid with a freezing point higher than −15°C, the device requires a flow switch, which is sold as an accessory. The flow switch prevents the device from operating if the minimum flow rate of the evaporator is not achieved.

Preventing freezing in the evaporator

If the system uses a collector fluid with a freezing point of −15°C or higher (e.g., water), the protection temperature for the fluid leaving the evaporator for the compressor should be set at +6°C or higher. This prevents the heat exchanger from freezing and possibly breaking down. If the set temperature is reached, the compressor shuts down, a low-priority (B) alert is activated, and the device waits one hour before trying to restart.

Brine control function

An evaporator temperature limit is set in the controller to limit the compressor power when the temperature drops to the setpoint. The power limit is set on sites where the heat collection system's power is limited in relation to the heat pump power, i.e., when the temperature of the collection fluid becomes too low. The function allows the heat pump to remain operating and generate heat, even when the collector temperature falls to the set protection value.

Note the additional heat source setting in the brine control function.

9.9 Cascade system operation

A cascade system is a system of several heat pumps connected in series or parallel where the master device manages the common heating and cooling demand. The devices communicate via a local area network between the automation system.

The heating demand is formulated from the circuit setpoints or domestic hot water controlled by the heat pump's automation system. A building automation system can send heat requests via the Modbus interface.

The master device's controller measures the temperatures of the accumulators for the selected functions, and the heat pumps produce heat according to the setpoint. The master device's automation system manages the calculation of the cascade's capacity and determines the power regulation by starting up and shutting down the correct number of compressors.

The system balances the operation of parallel compressors and strives for optimal efficiency. The system equalises the operating hours of similar compressors when starting up and shutting down devices.

Each device handles its control and safety functions independently.

9.10 Additional/reserve heat sources and settings

Additional/reserve heat is a heat pump automation feature that controls the heat source intended for heating the building. There are two control modes: three-stage relay control or stepless analogue control. The controlling sensor is the network supply temperature sensor **B11**.

The heat pump's controller can control two different types of additional heat sources: electric heaters in the accumulator and a controllable additional heat source. The control options are additional heat source or reserve heat source. An additional heat source operates as part of a cascade system, where additional heat is used as the last power level if the heat pump's power or supply water temperature are insufficient to meet the building's needs. A reserve heat source operates in the event of maintenance/disturbances.

The additional/reserve heat source is controlled according to the capacity counter. The additional heat source's PI controller is used to calculate the capacity. The PI controller settings are under **ADDITIONAL HEAT** in the service menu.

Relay control:

The electrical heaters in the heating accumulator are controlled by two relays that operate in three steps. The function can be enabled under CONFIGURATION in the service menu. The start-up and shut-down settings are under ADDITIONAL HEAT in the service menu.

- Step 1 – K28 (TC1.4 – relay 3)
- Step 2 – K29 (TC1.4 – relay 4)
- Step 3 – K28 + K29

Analogue control:

An additional heat source installed in the supply water is controlled by the controller's digital output and control signals from an analogue output (0–10 V). The digital output starts up the additional heat source, and the analogue output steplessly adjusts the additional heat source's power according to the supply temperature sensor (**B11**).

The function can be enabled under **CONFIGURATION** in the service menu. The start-up and shut-down settings are under **ADDITIONAL HEAT** in the service menu.

You will only see the settings for additional heat sources that have been specified for the hardware configuration.

Supply water temperature limits

Under Supply water, you can specify upper and lower temperature limits for the common supply water. These control the operation of additional heat sources.

Control mode

Under Control mode, you can specify an operating mode for each additional heat source individually to determine their roles in heating the building:

Parallel: the additional heat source starts up in parallel with the compressor if the compressor's power or the set temperature are not realised (part-powered system).

Reserve heat: the additional heat source is a full substitute for the compressor when heating the building in the event of a disturbance or similar event.

Changing the order

If both additional heat sources are enabled, you can specify which one should start up first:

- K28–K27: the electric heaters in the accumulator are the primary additional heat source.
- K27–K28: a controllable additional heat source is the primary additional heat source

© 2025 Gebwell

9.11 Connection to a building automation system

You can configure the Modbus settings in the service menu under Communication connections.

Modbus communication

The Modbus communication link enables the device's temperatures, status, setpoints and failures to be read by a higher-level automation system. Gebwell heat pumps can be controlled via a Modbus connection by sending a heat request in percentages (%) or a setpoint in degrees Celsius (°C).

The heat pump functions only as a slave device in the building automation system.

The G-Eco heat pump supports the serial port (RTU) and ethernet (TCP) Modbus versions.

Modbus RTU

Modbus communication takes place using the RS-485 protocol. The network structure should be such that the devices are connected directly to one trunk cable. The network topology cannot be a star or ring. It also cannot be a trunk bus with connected stars or clusters. All such structures must be removed from the network.

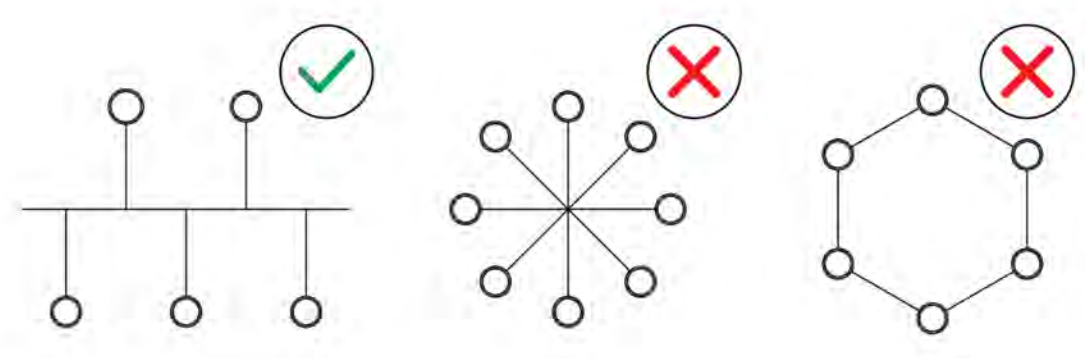

Twisted pair cables should be used for Modbus RTU data transfer, and the cables must meet the requirements specified in the EIA-485 standard for double-wire systems.

The cable's maximum standardised length depends on the data transfer rate and the cable's properties, such as its characteristic impedance and thickness. The Modbus guidelines specify a maximum length of 1,000 metres if the cable's cross-sectional area allows for this. At baud rates of 19,200 or more, the recommended characteristic impedance is 100 ohms.

Data transfer settings:

For serial traffic, the required parameters are the baud rate, the parity and the stop bits. The data transfer settings of all devices on the same bus must be the same, and they must be set for each device individually. If the parameters are set incorrectly, the slave device will not be able to respond to requests sent by the master device.

Address

The address specifies the slave device. Every device must have a unique address. The address can be between 1 and 247.

Modbus TCP

Modbus TCP communication takes place over the TCP/IP network using port 502. A standard Ethernet cable (e.g. CAT5 twin cable) is used for communication. The master and slave devices must be within the same IP address space.

The IP addresses of Gebwell heat pumps are usually as follows:

- 1st device: 192.168.1.10
- 2nd device: 192.168.1.11
- 3rd device: 192.168.1.12, etc.

See section 14 (Modbus registers).

Modbus settings

Under Modbus module, configure the settings so that they match the settings of the upper-level automation system.

9.12 Heat pump control by an external automation system

The heat pump/heat pump system can be controlled by an external automation system in two control modes: independent heating/cooling producer or heating/cooling production system. Both control modes follow a control logic based on a temperature setpoint.

As an independent heating/cooling producer, a heating and/or cooling release signal and setpoint (°C) are recorded for the heat pump. The controller controls the compressor according to the requested temperature and keeps the supply water temperature at the setpoint. In heating charge mode, the functional sensor is supply temperature sensor B21 in the condenser, while in cooling charge mode, the functional sensor is supply temperature sensor B92 in the evaporator.

In a system, the heat pump, or a cascade system of several devices, produces heating, cooling or domestic hot water for the accumulators according to the heat pump's own automation system. The heat pump measures the temperature of the accumulators whose setpoints are specified by the upper-level automation system. The internal system manages the power regulation of the compressor, or compressors in a cascade system, and manages the accumulator temperatures according to the setpoints. In cascade systems, the setpoints are written to the master device.

9.12.1 Independent heating/cooling producer

The heat pump is controlled in the HEATING or COOLING operating mode. Mode control is used to select which supply temperature sensor regulates the compressor power. Depending on the selected control mode, the heat pump maintains the supply water setpoint. When changing between heating and cooling mode, the release signal should be deleted, and a new release signal should be issued for the other operating mode. The heat pump performs a controlled change-over.

Heat pump setpoint HEATING:

The heat pump receives a heating release signal from register 4x 102 (0 = STOP / 1 = ON). The release signal starts up the device's charge pump. The heat pump's setpoint is written to register 4x 104 (°C).

The heat pump produces heating according to the supply temperature sensor (**B21**). The compressor starts up when the supply water measurement is below the setpoint and the capacity calculation is above the compressor's minimum speed limit (**20%**). The compressor can be steplessly adjusted between **20% and 100%**. If the system needs less power than the heat pump's minimum permitted speed (**1–20%**), the compressor operates at the minimum speed until the capacity management calculation reaches **0%**.

Heat pump setpoint COOLING:

The heat pump receives a cooling release signal from register 4x 1201 (0 = STOP / 1 = ON). The release signal starts up the device's source pump. The heat pump's setpoint is written to register 4x 1202 (°C).

The heat pump produces cooling according to the supply temperature sensor (**B92**). The compressor starts up when the supply water measurement is below the setpoint and the capacity calculation is above the compressor's minimum speed limit (**10%**). The compressor can be steplessly adjusted between **10% and 100%**. If the system needs less power than the heat pump's minimum permitted speed (**1–20%**), the compressor operates at the minimum speed until the capacity management calculation reaches **0%**.

9.12.2 System

The system's external temperature sensors are connected to the heat pump's control system. In cascade systems, temperature sensors are connected to the master device.

Domestic hot water

The domestic hot water accumulator has two temperature sensors. The accumulator's upper sensor (**B2**) measures the temperature of domestic hot water available from the accumulator. The accumulator's lower sensor (**B3**) is a functional sensor used to start and stop charging. Domestic hot water charging operates according to the setpoint and hysteresis. When the **B3** measurement reaches the setpoint, charging stops. Setpoint - (minus) when hysteresis is below, charging starts. During start-up and shut-down, the device follows its own protocol, and the device controls the circulator pumps internally to achieve optimal performance. The heat pump controls the change-over valve (**Y3**) according to the charge mode.

The upper temperature of the domestic hot water accumulator (**B2**) is read from register 3x 701. The lower temperature of the domestic hot water accumulator (**B3**) is read from register 3x 702.

The domestic hot water accumulator's setpoint is written to register 4x 901. The setpoint is the point at which domestic hot water charging stops. The domestic hot water start-up point comes from the hysteresis difference. The hysteresis of domestic hot water charging is written to register 4x 706.

The change-over valve's status is read from register 3x 704 in the device that produces domestic hot water. 0 = heating 1 = domestic hot water.

If the domestic hot water sensors are cabled into a building automation system, the measurement values from the sensors can be written to the heat pump's automation system. Value of the upper sensor of the domestic hot water accumulator 4x 709 (B2). Value of the lower sensor of the domestic hot water accumulator 4x 708 (**B3**). Note: when writing the temperature, a data transfer interruption or outage may prevent the heat pumps from operating. Data transfer must be ready to use when commissioning the heat pump.

Heating

There are two ways to charge heating: directly into the building's heating network or into a buffer tank. Only inverter-controlled heat pump models offer a connection without a buffer tank.

In a system without an accumulator, a single device uses the internal supply water measurement (**B21**) as the control sensor. In a cascade system, the control sensor is **B10**, which is placed in the common charging supply water line for heating.

The heating accumulator has two temperature sensors. The accumulator's upper sensor (**B10**) measures the temperature of the supply water leaving the accumulator. The sensor is placed at the height of the supply water going into the accumulator or slightly below it. The accumulator's lower sensor (**B15**) is a compensating measurement that influences (%) the accumulator's average temperature. Predictions take into account the temperature in the lower part of the accumulator, compensating the heat pump's setpoint to keep the outgoing water temperature closer to the setpoint.

The heating accumulator's upper part/upper temperature (**B10**) is read from register 3x 901, and the lower temperature (**B15**) is read from register 3x 908.

If the heating accumulator's sensors are cabled into a building automation system, the measurement values from the sensors can be written to the heat pump's automation system. Value of the heating accumulator's upper sensor 4x 901 (**B10**). Value of the heating accumulator's lower sensor 4x 711 (**B15**). Note: when writing the temperature, a data

transfer interruption or outage may prevent the heat pumps from operating. Data transfer must be ready to use when commissioning the heat pump.

Heat pump setpoint HEATING

The heat pump receives a heating release signal from register 4x 102 (0 = STOP / 1 = ON). The release signal starts up the device's charge pump. The heat pump's setpoint is written to register 4x 104 (°C). In normal heating operation, the heat pump's release signal must be active at all times so that the heat pump's controller manages the heating according to the written setpoint. In summer use or in abnormal situations, release signal control can put the device in STOP mode in a controlled manner. Note: when the heating release signal is STOP, the heat pump can produce domestic hot water and cooling.

The heat pump produces heating according to the supply temperature sensor (**B21**). The compressor starts up when the supply water measurement is below the setpoint and the capacity calculation is above the compressor's minimum speed limit (**20%**). The compressor can be steplessly adjusted between **20% and 100%**. If the system needs less power than the heat pump's minimum permitted speed (**1–20%**), the compressor operates at the minimum speed until the capacity management calculation reaches **0%**.

Mechanical cooling

It is recommended that cooling be charged to the buffer tank to ensure optimum functionality. In an inverter-controlled heat pump model, charging can also be carried out directly into the building's cooling network.

In a system without an accumulator, a single device uses the internal evaporator supply water measurement (**B92**) as the control sensor.

There is one temperature sensor in the cooling accumulator. The accumulator's lower sensor (**B40**) measures the temperature of the supply water leaving the accumulator. The sensor is placed at the height of the supply water going into the accumulator (low) or slightly above it.

The lower part/lower temperature (**B40**) of the cooling accumulator is read from register 3x 1205.

Heat pump setpoint COOLING (water cooler)

The heat pump receives a cooling release signal from register 4x 1201 (0 = STOP / 1 = ON). The release signal starts up the device's source pump. The heat pump's setpoint is written to register 4x 1202 (°C). In normal cooling operation, the heat pump's release signal must be active at all times so that the heat pump's controller manages the cooling according to the written setpoint. When cooling is not in use or in abnormal situations, release signal control can put the device in STOP mode in a controlled manner.

The heat pump produces cooling according to the supply temperature sensor (**B92**). The compressor starts up when the supply water measurement is below the setpoint and the capacity calculation is above the compressor's minimum speed limit (**20%**). The compressor can be steplessly adjusted between **20% and 100%**. If the system needs less power than the heat pump's minimum permitted speed (**1–20%**), the compressor operates at the minimum speed until the capacity management calculation reaches **0%**.

During commissioning, limits must be defined in the controller to limit the operation of the evaporator circuit, along with a protection value that shuts down the compressor. These settings should be configured under Collector settings in the service menu.

If the cooling accumulator's sensor is cabled into a building automation system, the sensor's measurement values can be written to the heat pump's automation system. Value of the cooling accumulator's lower sensor 4x 1216 (**B40**) Note: when writing the temperature, a data transfer interruption or outage may prevent the heat pumps from operating. Data transfer must be ready to use when commissioning the heat pump.

10 Heat pump maintenance and servicing

Only use spark-resistant tools and clothing when working. A leak detector suitable for R290 refrigerant must be used throughout the procedure

Do not start work until all supplies and tools are available. Refer to section **10.2 Personal protective equipment and tools** for the required equipment.

Do not use a battery-powered drill or flame at any time when disassembling the device.

The operation of safety circuits must be checked during annual maintenance.

Clean up any spill oil immediately to prevent the oil from evaporating and forming harmful vapours.

Note that the heat pump contains both hot and cold components.

Maintenance and service work should only be performed by appropriately trained and authorized personnel. Personal protective equipment and tools must be suitable for use with flammable refrigerant.

To ensure the long life and trouble-free operation of your heat pump, the following sections should be checked every year. Also remember to maintain and inspect accessories in accordance with these instructions. It is the responsibility of the holder and the owner of the equipment to carry out periodical maintenance and to keep an updated record of inspections and servicing.

All performed maintenance and inspections must be recorded in the service log. Completion of the maintenance and inspections specified in this document, as well as those required by applicable laws and regulations, is a prerequisite for the validity of the manufacturer's warranty.

10.1 Annual inspections

Site	Actions
General appearance and leaks	Check whether there are any visible fluid leaks, oil or anything else that appears abnormal inside and outside the heat pump. It is normal for a small amount of water to drip from the safety valves due to pressure fluctuations.
Refrigerant circuit and safety functions	Check the refrigerant circuit in accordance with the separate inspection record. An annual inspection of the safety circuits is mandatory. Test the differential pressure transmitter, ventilation air extractor and leak detectors in the safety circuits. We recommend inspecting the refrigerant circuit annually. Record the inspection date and the date the next inspection is due on the cooling device's label and in the service log. Test the operation of the gas leak detector using test gas. Follow the procedure for resetting the differential pressure gauge.
Heating system	Check the heating system pressure. Check the correct operating pressure from the installation record or plan. If the pressure is too low, add liquid using the network filling valve. If you need to add liquid frequently, investigate the cause of the pressure drop. Check that the gas separators are not leaking fluid. If leaks occur, the gas separator must be replaced.
Collector	Check the collector pressure. Check the correct operating pressure from the installation record or plan. If the pressure is too low, add liquid using the network filling valve. After commissioning, it may be necessary to add fluid for a few days – a few litres is within the normal range. When the source pump starts up, the pressure should decrease slightly. The pressure will then increase correspondingly when the pump shuts off. Other behaviours indicate the presence of air in the system or debris in the strainer.
	Check and clean the collector's strainer. The strainer should be inspected after commissioning. However, avoid opening the collector unnecessarily. If the strainer is dirty, the collector's temperature difference will increase when the compressor is running. This may cause malfunctions. Check that the gas separators are not leaking fluid. If leaks occur, the gas separator must be replaced.
Ventilation duct	Check the ventilation duct's maintenance connection and remove any accumulated water.

Refer to the separate maintenance work instructions document for detailed procedures.

All performed maintenance and inspections must be recorded in the service log. Completion of the maintenance and inspections specified in this document, as well as those required by applicable laws and regulations, is a prerequisite for the validity of the manufacturer's warranty.

© 2025 Gebwell

10.2 Personal protective equipment and tools

All equipment and tools required for maintenance work (opening the cooling circuit) must be approved for use in category 2 locations with an explosion hazard. They must be marked with the Ex symbol and the CE mark.

A personal gas detector must be used throughout the work.

Note that pressure tests may only be performed with nitrogen.

Tool	**Caution**
Gauge set and hoses (R290)	
Vacuum pump	Category Ex spark-resistant coupling and motor, 5 m cable
Fan	Category Ex plastic wing spark-resistant coupling and motor, 5 m cable
Scale	
Recovery device	Category Ex spark-resistant coupling and motor, pressure switch, airtight electrical equipment and 5 m cable
Leak indicator	
Electronic instruments	Category Ex
Manual tools	Spark-resistant, e.g., brass screwdriver/bronze tools
Power tools	Category Ex
Refrigerant tank	Single-use (with special thread) large (red collar, left-handed valve
Chemical-resistant gloves	
Spark-resistant workwear	
Safety goggles	

© 2025 Gebwell

10.3 Draining the cooling circuit

Refer to the maintenance instructions for procedures related to opening the refrigeration circuit.

When draining a heat pump for maintenance or decommissioning, always start by carefully ensuring safety, preparing the work site, and performing documented risk management. In a service situation, always consider the possibility of an undetected refrigerant leak. In other words, always follow the same safety instructions and work sequence, regardless of whether the device has issued a gas leak alarm.

© 2025 Gebwell

11 Malfunctions and alerts

If the controller detects a malfunction, an alarm symbol will appear on the display. For more information about the alarm, press the alarm button (**Figure 9.1**). See also Alert registers in section **13 Modbus registers.**

Record the alert in the service log to facilitate any service actions. Once the cause of the alarm has been identified and rectified, you can delete it by pressing the Alarm button then ► **Alarm list** ► **Clear alarms**.

First, try to resolve the situation yourself using the troubleshooting table. If that does not work, contact an authorised technician.

11.1 Troubleshooting

If there are no specific alerts on the screen, take the following basic steps:

1. Check all the connections.
2. Check the fuses in the building and the heat pump.
3. Check the residual current device.

Problem	Possible cause	Corrective action
Low room temperature	The heat pump is in the wrong operating mode.	Set the heat pump's heating functions to the correct operating mode.
	Thermostats closed on the radiators or underfloor heating	Open the thermostats in as many rooms as possible.
		Adjust the room temperature in the *Setpoint room* menu instead of closing the thermostats.
	The automation setpoint is too low	Raise the comfort setpoint in the *Setpoint room* menu.
		Under *Heating curve*, increase the heating curve supply water setpoint at that outside temperature point.
		Set the maximum setpoint for supply water to a sufficiently high value on the *Setpoint supply water temp.* menu.
	The heating circuit's time programme is on	Go to the *Time programme heating circuit* menu and adjust the time programme.
	Air in the heating system	Release the air from the heating system.
	Closed valves between the accumulator and the heat supply network	Open the valves.
High room temperature	The setpoints for the heating circuits are too high.	Reduce the heating curve supply water setpoint at that outside temperature point.
Domestic water is cold	The domestic hot water function is not active.	Set the *Domestic hot water operating mode* to the correct value.
	Domestic hot water consumption too high	Wait until the water warms up. If necessary, set the electrical resistances to hot water generation along with the compressor.
	Setpoint too low	Go to the *Domestic hot water setpoints* menu and increase the setpoint for domestic hot water.
	Supply mixing valve setting too small	Open the valve.

Problem	Possible cause	Corrective action
Compressor does not start up	No need for heat	Check the device's status in the *Details* menu.
	The minimum compressor stop time is active	Wait 20 minutes and check whether the compressor starts up.
	The device has a failure	Press the alarm button to retrieve the list of alerts and check the cause of the alert. Acknowledge any alerts. If the alert does not clear or repeats, contact the company that installed the device or Gebwell Technical Support.
High room temperature	The setpoints for the heating circuits are too high.	If the room temperature is only too high during cold weather, decrease the gradient of the heating curve.
		If the room temperature is too high during mild weather, decrease the comfort setpoint.

12 Technical specifications G-Eco Pro 120

Power data in accordance with EN14511		
Feature	**Unit**	
0/35		
Heating output min-max	kW	56.5 – 118.5
Cooling capacity min-max	kW	44.6 – 89.2
Rated power input at 50hz speed	kW	21.4
COP at 50hz speed		4.7
SCOP, cold climate, according EN14511		4.83
0/55		
Heating output min-max	kW	48.0 – 103.5
Cooling capacity min-max	kW	34.4 – 70.0
Rated power input at 50hz speed	kW	26.4
COP at 50hz speed		3.3
SCOP, cold climate, according EN14511		4.0

Electrical specifications		
Feature	**Unit**	
Rated voltage/electrical connection		400 VAC, 3L+N+PE, 50 Hz
Short-term dimensioning withstand current Icw	kA	6
Maximum supply current (including the control systems and pumps) – ground source heat operation	Arms	71,5
Maximum supply current (including the control systems and pumps) – other operation		
Recommended protective device operating current – ground source heat operation	A	3 x 80
Recommended protective device operating current – other operation		
Maximum input power	kW	40,1
Charge pump power	kW	0,9
Source pump power	kW	2,2

Refrigerant circuit		
Feature	**Unit**	
Contains fluorinated greenhouse gases		No
Hermetically sealed		Yes
Refrigerant		R290
Global Warming Potential (GWP) of the refrigerant		0,02
Refrigerant quantity	kg	4,7
CO2 equivalence	tonne CO_2e	0,000094
Disconnection, overpressure	MPa	26
Difference, overpressure	MPa	
Disconnection, underpressure	MPa	0,6
Difference, underpressure	MPa	

Compressor		
Feature	**Unit**	
Number of compressors		1
Compressor type		Piston
Compressor oil		FRASCOLD PAG68H
Oil quantity	L	7,2

Collector		
Feature	**Unit**	
Maximum pressure	MPa	0.6 (6 bar)
Rated flow	L/s	2,5 – 7,2
Maximum external pressure loss at rated flow	kPa	200 (7,3 l/s)
Minimum input temperature of brine	°C	-10
Maximum input temperature of brine	°C	20

Charge circuit		
Feature	**Unit**	
Maximum pressure	MPa	1,0 (10 bar)
Rated flow	L/s	2,5 – 5,8
Maximum external pressure loss at rated flow		
Minimum supply water temperature	°C	20**
Maximum supply water temperature	°C	63

Extraction		
Feature	**Unit**	
Minimum flow rate in SAFETY mode	m^3/h	157

Dimensions and weights		
Feature	**Unit**	
Depth	mm	1250
Width	mm	750
Height	mm	1870
Weight	kg	800

© 2025 Gebwell

Pipe connections		
Feature	**Unit**	
Collector		G2 1/2” sk
Heat supply		G2 1/2” sk
Ventilation	mm	125
Sound power level (LWA) 0/35	dB	54 - 59
Controller		Gebwell CLI

** *The temperature difference between the liquid entering the evaporator and leaving the condenser must be at least 15 K. The heat pump’s automation ensures compliance with operating limits through its internal pressure monitoring.*

12.1 Technical specifications G-Eco Pro 120 HT

Power data in accordance with EN14511*		
Feature	**Unit**	
0/35		
Heating output min-max	kW	56.5 – 118.5
Cooling capacity min-max	kW	44.6 – 89.2
Rated power input at 50hz speed	kW	21.4
COP at 50hz speed		4.7
SCOP, cold climate, according EN14511		4.83
0/55		
Heating output min-max	kW	48.0 – 103.5
Cooling capacity min-max	kW	34.4 – 70.0
Rated power input at 50hz speed	kW	26.4
COP at 50hz speed		3.3
SCOP, cold climate, according EN14511		4.0

Electrical specifications		
Feature	**Unit**	
Rated voltage/electrical connection		400 VAC, 3L+N+PE, 50 Hz
Short-term dimensioning withstand current Icw	kA	6
Maximum supply current (including the control systems and pumps) – ground source heat operation	Arms	97.1
Maximum supply current (including the control systems and pumps) – other operation		
Recommended protective device operating current – ground source heat operation	A	3 x 100
Recommended protective device operating current – other operation		
Maximum input power	kW	54.5
Charge pump power	kW	0.9
Source pump power	kW	2.2

Refrigerant circuit		
Feature	**Unit**	

Contains fluorinated greenhouse gases		No
Hermetically sealed		Yes
Refrigerant		R290
Global Warming Potential (GWP) of the refrigerant		0.02
Refrigerant quantity	kg	4.9
CO2 equivalence	tonne CO_2e	0.000098
Disconnection, overpressure	MPa	32
Difference, overpressure	MPa	
Disconnection, underpressure	MPa	0.6
Difference, underpressure	MPa	

Compressor		
Feature	**Unit**	
Number of compressors		1
Compressor type		Piston
Compressor oil		FRASCOLD PAG100
Oil quantity	L	7.2

Collector		
Feature	**Unit**	
Maximum pressure	MPa	0.6 (6 bar)
Rated flow	L/s	3.1 – 7.1
Maximum external pressure loss at rated flow	kPa	190 (7.0 l/s)
Minimum input temperature of brine	°C	-10
Maximum input temperature of brine	°C	30

Charge circuit		
Feature	**Unit**	
Maximum pressure	MPa	1.0 (10 bar)
Rated flow	L/s	2.6 – 6.1
Maximum external pressure loss at rated flow		
Minimum supply water temperature	°C	20**
Maximum supply water temperature	°C	75

Extraction		
Feature	**Unit**	
Minimum flow rate in SAFETY mode	m^3/h	164

Dimensions and weights		
Feature	**Unit**	
Depth	mm	1250
Width	mm	750
Height	mm	1870

Weight	kg	800

Pipe connections		
Feature	**Unit**	
Collector		G2 1/2” sk
Heat supply		G2 1/2” sk
Ventilation	mm	125
Sound power level (LWA) 0/35	dB	54 - 59
Controller		Gebwell CLI

** Measured dT 3 on brine circuit*

*** The temperature difference between the liquid entering the evaporator and leaving the condenser must be at least 15 K. The heat pump’s automation ensures compliance with operating limits through its internal pressure monitoring.*

12.2 Range of operation G-Eco Pro 120

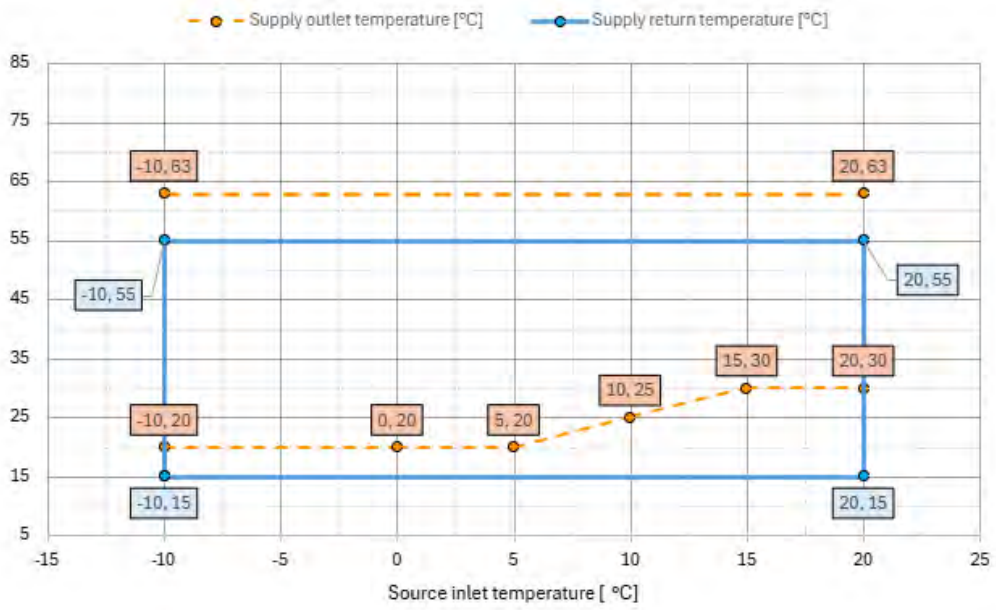

Figure 12.1 Range of operation

12.3 Range of operation G-Eco Pro 120 HT

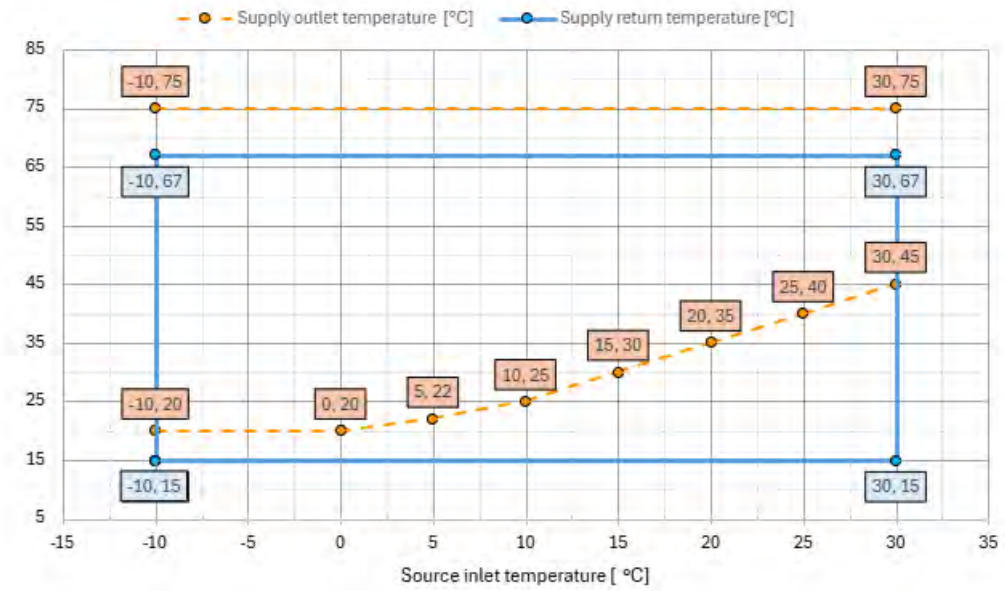

Figure 12.2 Range of operation

12.4 Performance value graphs G-Eco Pro 120

Heating capacity [kW]

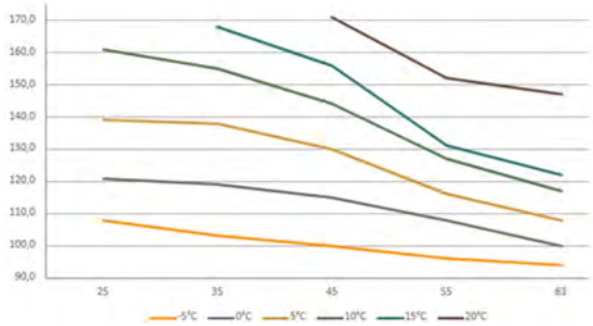

Cooling capacity [kW]

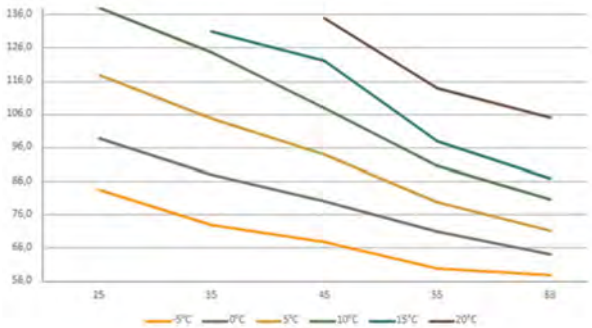

Electricity input [kW]

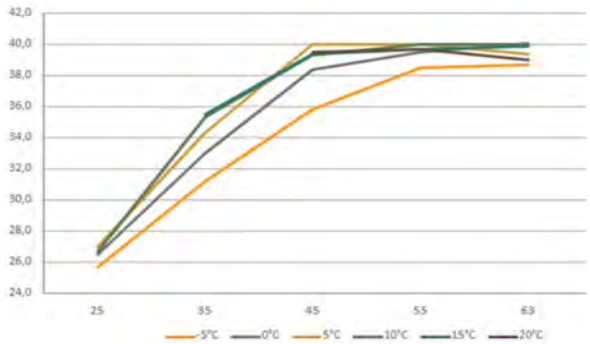

COP, 70 Hz

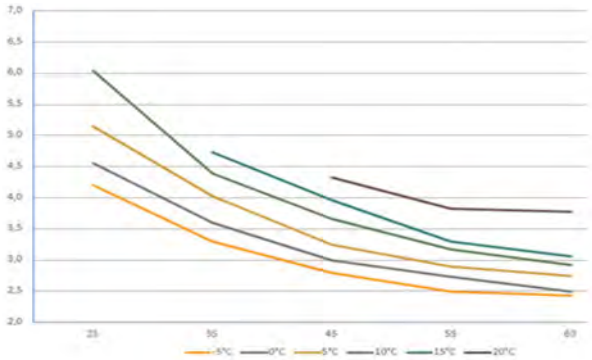

Maximum external pressure loss, brine side [kPa – l/s]

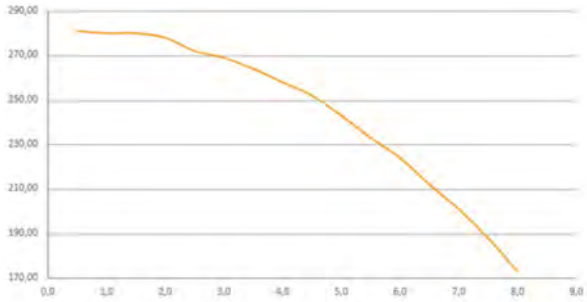

Maximum external pressure loss, heating side [kPa – l/s]

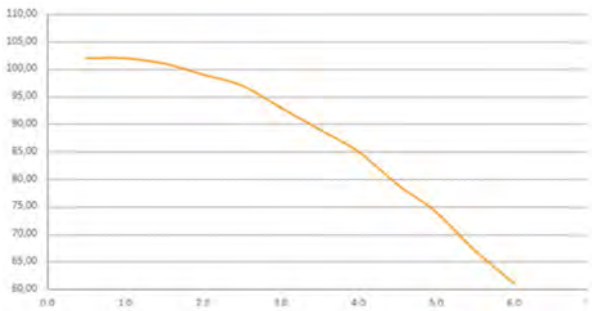

Evaporator flow, brine side dT4 [l/s]

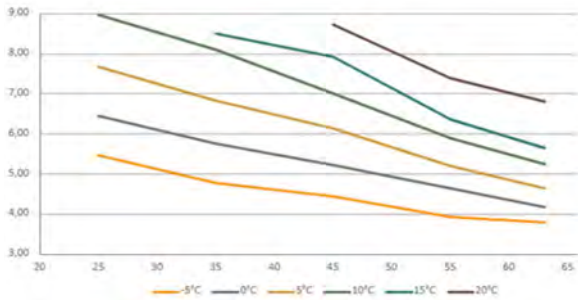

Condenser flow, supply side dT5 [l/s]

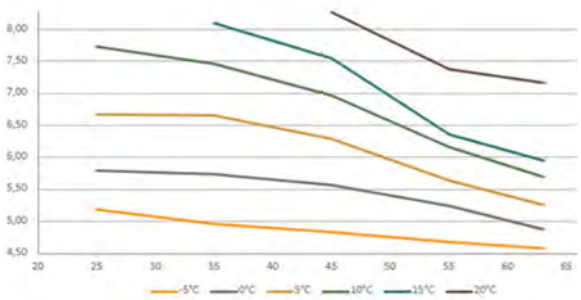

12.5 Performace value graphs G-Eco Pro 120 HT

Heating capacity [kW]

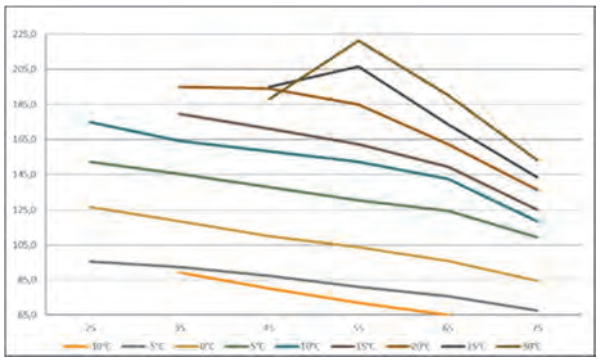

Cooling capacity [kW]

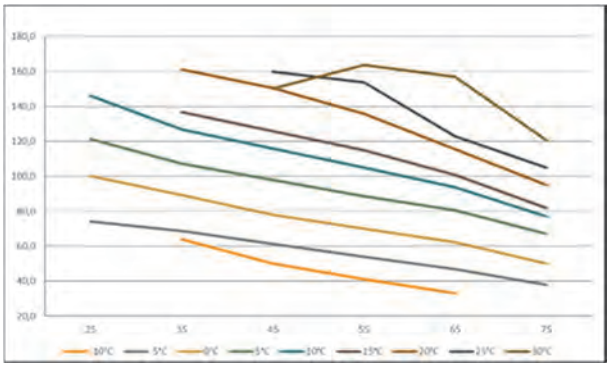

COP, without circulation pumps, 50 Hz

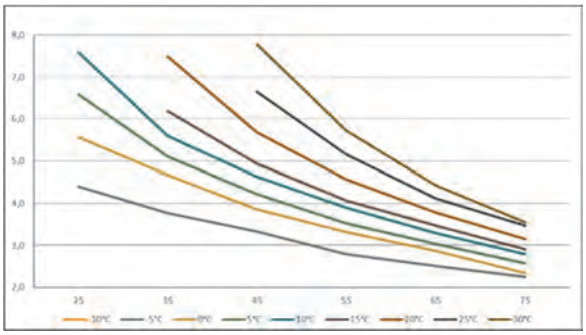

Maximum external pressure loss, brine side [kPa – l/s]

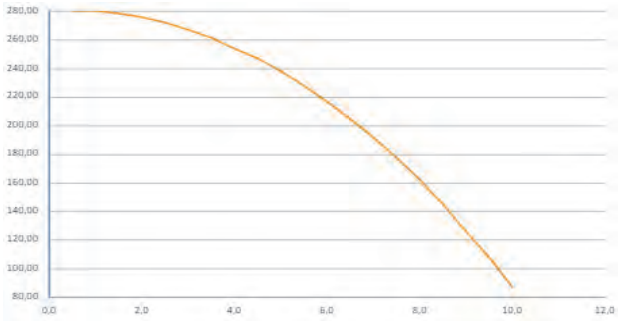

Maximum external pressure loss, heating side [kPa – l/s]

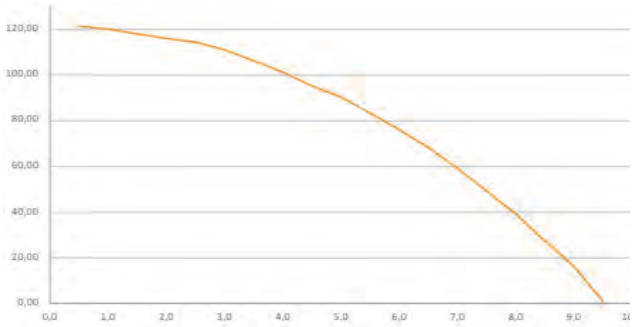

Evaporator flow, brine side dT4 [l/s]

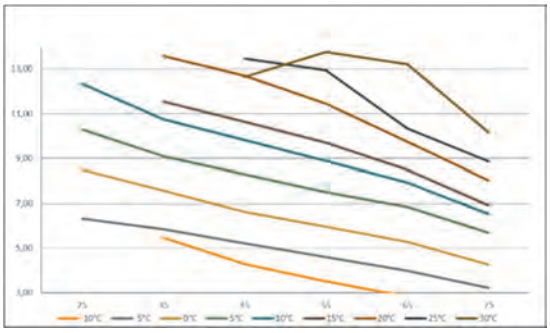

Condenser flow, supply side dT8 [l/s]

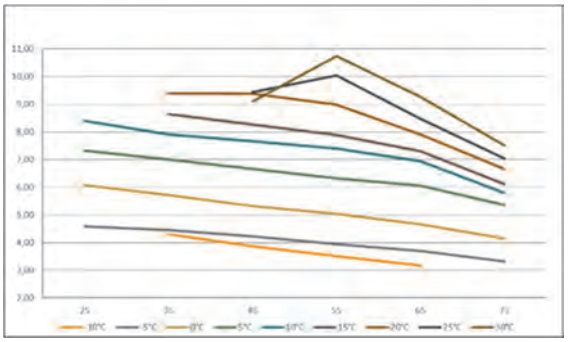

Internal pressure loss, evaporator [kPa, l/s]

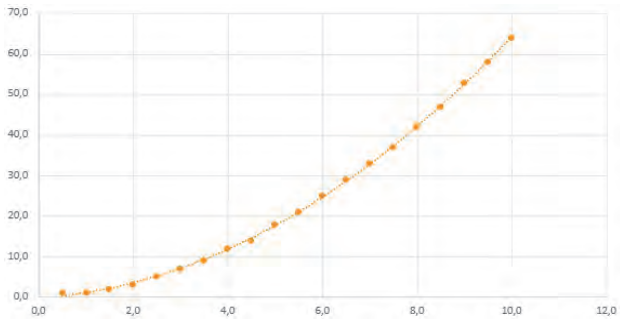

Internal pressure loss, condenser [kPa, l/s]

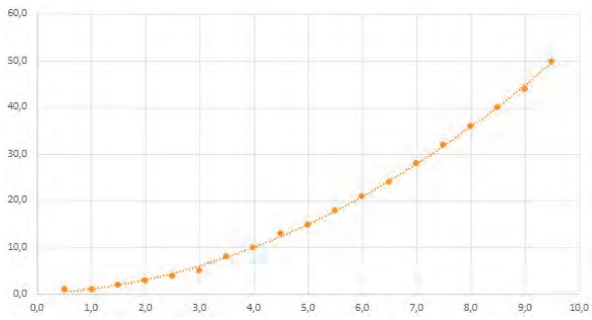

13 Modbus registers

Heat pump status information and measurements	ID	Read/Write (R/W)	Register type 1)	Register address	Unit	Resolution (divisor) 2)	Device 1 (master)	Devices 2, 3 etc. (slave)
Heat pump supply water	B21	R	3x	201	°C	10	x	x
Heat pump return water	B71	R	3x	202	°C	10	x	x
Collector inbound	B91	R	3x	301	°C	10	x	x
Collector out	B92	R	3x	302	°C	10	x	x
Compressor status	K1	R	3x	310	0=Off / 1=On		x	x
Compressor speed	K1	R	3x	311	%	1	x	x
Compressor oil temperature sensor	B80	R	3x	1266	°C	10	x	x
Compressor heater status	K1H	R	3x	1268	0=Off / 1=On		x	x
Hot gas	B81	R	3x	303	°C	10	x	x
Evaporator pressure	H82	R	3x	304	bar	10	x	x
Condenser pressure	H83	R	3x	305	bar	10	x	x
Charge pump status	Q9	R	3x	205	0=Off / 1=On		x	x
Charge pump speed	Q9	R	3x	204	%	1	x	x
Source pump status	Q8	R	3x	309	0=Off / 1=On		x	x
Source pump speed/Collector control valve position	Q8	R	3x	306	%	1	x	x
Internal temperature of the machine compartment	B30	R	3x	1263	°C	10	x	x
Leak detector 1	QA1	R	3x	1265	%LFL	10	x	x
Leak detector 2 (accessory)	QA2	R	3x	1281	%LFL	10	x	x
Heat pump underpressure	H01	R	3x	1264	Pa	1	x	x
Ventilation air extractor speed (device-specific)	FA1	R	3x	1267	%	1	x	x
Evaporator flow switch	FS1	R	3x	1282	0=Off / 1=On		x	x

System status information and measurements	ID	Read/Write (R/W)	Register type 1)	Register address	Unit	Resolution (divisor) 2)	Device 1 (master)	Devices 2, 3 etc. (slave)
Outdoor temperature	B9	R	3x	101	°C	10	x	
Change-over valve status	Y3	R	3x	704	0=heating / 1=domestic hot water		x	
Ventilation air extractor speed (common)	FA1C	R	3x	1267	%	1	x	x
Temperature of the upper part of the heating accumulator (cascade)	B10	R	3x	901	%	10	x	
Accumulator lower part temperature	B15	R	3x	908	°C	10	x	
Charge return common temperature (cascade)	B70	R	3x	905	°C	10	x	
Space heating – common	B72	R	3x	906	°C	10	x	x
Common source pump status	Q8C	R	3x	904	0=Off / 1=On		x	
Common source pump speed	Q8C	R	3x	903	%	1	x	
Additional heat source supply water temperature	B11	R	3x	805	°C	10	x	x
Electric heater for the heating accumulator	K28/K29	R	3x	808	Refer to 3)	10	x	x
Additional heat source status	Y27	R	3x	806	0=Off / 1=On	10	x	x
Additional heat source control signal	TV27	R	3x	807	%	10	x	x
Heating system pressure	H11	R	3x	215	bar	10	x	x
Collector pressure	H21	R	3x	320	bar	10	x	x
Cooling transfer pump	Q28	R	3x	1252	0=Off / 1=On	1	x	

Domestic hot water status information data and measurements	ID	Read/Write (R/W)	Register type 1)	Register address	Unit	Resolution (divisor) 2)	Device 1 (master)	Devices 2, 3 etc. (slave)
Domestic hot water accumulator temperature (upper sensor)	B2	R	3x	701	°C	10	x	
Domestic hot water accumulator temperature (lower sensor)	B3	R	3x	702	°C	10	x	
Domestic hot water supply water temperature	B38	R	3x	708	°C	10	x	
Domestic hot water circulation temperature	B39	R	3x	709	°C	10	x	
Domestic hot water mixing valve	TV38	R	3x	713	%	1	x	
Domestic hot water circulator pump status	Q4	R	3x	714	0=Off / 1=On		x	
Domestic hot water electric heater status	K6	R	3x	703	0=Off / 1=On		x	
Readable setpoints:								
Heat pump setpoint – Heating operation	B21	R	3x	1283	°C	10	x	x
Heat pump setpoint – Cooling operation	B92	R	3x	1284	°C	10	x	x
Domestic hot water setpoint	B3	R	3x	711	°C	10	x	x
Cascade supply water setpoint	B10	R	3x	902	°C	10	x	
System supply water setpoint	B11	R	3x	815	°C	10	x	
Cooling accumulator setpoint	B40	R	3x	1206	°C	10	x	
External control:								
Heat pump operating mode		R/W	4x	105	Refer to 5)	1	x	x
Activating the charge circuit		R/W	4x	102	0=Off / 1=On		x	
Heat pump setpoint °C – heating		R/W	4x	104	°C	10	x	
External free cooling		R/W	4x	106	0=Off / 1=On		x	x
Heat pump start-up permission – cooling		R/W	4x	1201	0=Off / 1=On		x	
Heat pump setpoint °C – cooling		R/W	4x	1202	°C	10	x	
Domestic hot water setpoint – normal		R/W	4x	712	°C	10	x	

Operation monitoring:	ID	Read/Write (R/W)	Register type 1)	Register address	Unit	Resolution (divisor) 2)	Device 1 (master)	Devices 2, 3 etc. (slave)
Compressor operating time	K1	R	3x	312	t (32-bit data) Refer to 9)	1	x	x
Compressor start-up counter	K1	R	3x	314	units	1	x	x
Domestic hot water electric heater operating time	K6	R	3x	705	t (32-bit data) Refer to 9)	1	x	x
Domestic hot water electric heater start-up counter	K6	R	3x	707	units	1	x	x
Heating accumulator, element operating time	K28/K29	R	3x	809	t (32-bit data) Refer to 9)	1	x	
Heating accumulator, element start-up counter	K28/K29	R	3x	811	units	1	x	
Additional heat source operating time	K27	R	3x	812	t (32-bit data) Refer to 9)	1	x	
Additional heat source start-up counter	K27	R	3x	814	units	1	x	

Energy monitoring:

Momentary energy consumption		R	3x	111	kW	10	x	x
Momentary energy production		R	3x	212	kW	10	x	x
Momentary COP		R	3x	112		10	x	x
Cumulative heat production, heating		R	3x	206	kWh (32-bit data) Refer to 9)	1	x	x
Cumulative heat production, domestic hot water		R	3x	208	kWh (32-bit data) Refer to 9)	1	x	x
Cumulative heat production, system		R	3x	210	kWh (32-bit data) Refer to 9)	1	x	x
Cumulative energy consumption, heating		R	3x	102	kWh (32-bit data) Refer to 9)	1	x	x
Cumulative energy consumption, domestic hot water		R	3x	104	kWh (32-bit data) Refer to 9)	1	x	x
Cumulative energy consumption, system		R	3x	106	kWh (32-bit data) Refer to 9)	1	x	x
Cumulative COP, heating		R	3x	108		10	x	
Cumulative COP, domestic hot water		R	3x	109		10	x	
Cumulative COP, system		R	3x	110		10	x	
Current L1		R	3x	114	A	10	x	x

Energy monitoring:	ID	Read/Write (R/W)	Register type 1)	Register address	Unit	Resolution (divisor) 2)	Device 1 (master)	Devices 2, 3 etc. (slave)
Current L2		R	3x	115	A	10	x	x
Current L3		R	3x	116	A	10	x	x
Voltage L1		R	3x	117	V	10	x	x
Voltage L2		R	3x	118	V	10	x	x
Voltage L3		R	3x	119	V	10	x	x

Heat pump setpoints – entry

Heat pump switching difference		R/W	4x	111	°C	10	x	
Source pump minimum speed		R/W	4x	331	%	1	x	x
Maximum speed of the source pump		R/W	4x	333	%	1	x	x
Collector temperature difference setpoint (dT)		R/W	4x	335	K	10	x	x
Charge pump minimum speed		R/W	4x	204	%	1	x	x
Charge pump maximum speed		R/W	4x	206	%	1	x	x
Charge circuit temperature difference setpoint (dT) – heating		R/W	4x	208	K	10	x	x
Collector temperature setpoint		R/W	4x	210	°C		x	x

Domestic water settings

Domestic hot water operating mode		R/W	4x	701	Refer to 4)		x	
Domestic hot water setpoint – comfort	B3	R/W	4x	704	°C	10	x	
Domestic hot water setpoint – normal	B3	R/W	4x	712	°C	10	x	
Domestic hot water setpoint – reduced	B3	R/W	4x	703	°C	10	x	
Domestic hot water supply water setpoint		R/W	4x	705	°C	10	x	
Domestic hot water charge hysteresis		R/W	4x	706	K	10	x	

Temperatures recorded – see section 7)	ID	Read/Write (R/W)	Register type 1)	Register address	Unit	Resolution (divisor) 2)	Device 1 (master)	Devices 2, 3 etc. (slave)
Outdoor temperature	B9	R/W	4x	902	°C	10	x	
Heating upper temperature of accumulator	B10	R/W	4x	901	°C	10	x	
Heating lower temperature of accumulator	B15	R/W	4x	711	°C	10	x	
Domestic water accumulator upper temperature	B2	R/W	4X	709	°C	10	x	
Domestic water accumulator lower temperature	B3	R/W	4x	708	°C	10	x	
Cooling accumulator temperature	B40	R/W	4x	1216	°C	10	x	

Mechanical cooling – status information and measurements

Cooling accumulator temperature	B40	R	3x	1205	°C	10	x	
Cooling accumulator setpoint	B40	R/W	3x	1206	°C	10	x	
Preset control circuit supply water temperature	B41	R	3x	1207	°C	10	x	
Collector inbound temperature	B42	R	3x	1208	°C	10	x	
Cooling output temperature – secondary side	B43	R	3x	1201	°C	10	x	
Cooling setpoint	B43	R	3x	1202	°C	10	x	
Preset control valve	TV40	R	3x	1203	%	1	x	
Preset control circuit circulation pump	Q40	R	3x	1212	0=Off / 1=On	1	x	
Change-over valve – passive cooling	Y41	R	3x	1209	0 = Heating/1 = Cooling	1	x	
Change-over valve – active cooling	Y42	R	3x	1210	0 = Heating/1 = Cooling	1	x	
Shut-off valve/transfer pump – condensate discharge	Y43/Q45	R	3x	1211	0=Off / 1=On	1	x	
Control valve – condensate discharge	TV45	R	3x	1213	%	1	x	
Cooling accumulator – freeze protection	B40	R	3x	1215	0 = normal/1 = alert	1	x	
Cooling transferrer – freeze protection	B41	R	3x	1214	0 = normal/1 = alert	1	x	

Heating circuit 1	ID	Read/Write (R/W)	Register type 1)	Register address	Unit	Resolution (divisor) 2)	Device 1 (master)	Devices 2, 3 etc. (slave)
Circulator pump	Q2	R	3x	501	0=Off / 1=On	1	x	
Mixing valve	TV1	R	3x	502	%	1	x	
Room temperature	B51	R	3x	503	°C	10	x	
Supply water temperature	B1	R	3x	504	°C	10	x	
Supply water setpoint		R/W	4x	522	°C	10	x	
Summer/winter mode		R/W	4x	508	Refer to 8)	1	x	

Heating circuit 1 Settings

Comfort setpoint		R/W	4x	501	°C	10	x	
Normal setpoint		R/W	4x	523	°C	10	x	
Reduced setpoint		R/W	4x	502	°C	10	x	
Supply water min. setpoint		R/W	4x	504	°C	10	x	
Supply water max. setpoint		R/W	4x	505	°C	10	x	
Summer/winter outdoor temperature setpoint		R/W	4x	506	°C	10	x	
Heating curve – Supply water Y1		R/W	4x	512	°C	10	x	
Heating curve – Supply water Y2		R/W	4x	514	°C	10	x	
Heating curve – Supply water Y3		R/W	4x	516	°C	10	x	
Heating curve – Supply water Y4		R/W	4x	518	°C	10	x	
Heating curve – Supply water Y5		R/W	4x	520	°C	10	x	
Directional transposition		R/W	4x	521	K	10	x	

Heating circuit 2

Circulator pump	Q6	R	3x	601	0=Off / 1=On	1	x	
Mixing valve	TV2	R	3x	602	%	10	x	
Room temperature	B52	R	3x	603	°C	10	x	
Supply water temperature	B12	R	3x	604	°C	10	x	
Supply water setpoint		R/W	4x	622	°C	10	x	
Summer/winter mode		R/W	4x	608	Refer to 8)	10	x	

Heating circuit 2 Settings	ID	Read/Write (R/W)	Register type 1)	Register address	Unit	Resolution (divisor) 2)	Device 1 (master)	Devices 2, 3 etc. (slave)
Comfort setpoint		R/W	4x	601	°C	10	x	
Normal setpoint		R/W	4x	623	°C	10	x	
Reduced setpoint		R/W	4x	602	°C	10	x	
Supply water min. setpoint		R/W	4x	604	°C	10	x	
Supply water max. setpoint		R/W	4x	605	°C	10	x	
Summer/winter outdoor temperature setpoint		R/W	4x	606	°C	10	x	
Heating curve – Supply water Y1		R/W	4x	612	°C	10	x	
Heating curve – Supply water Y2		R/W	4x	614	°C	10	x	
Heating curve – Supply water Y3		R/W	4x	616	°C	10	x	
Heating curve – Supply water Y4		R/W	4x	618	°C	10	x	
Heating curve – Supply water Y5		R/W	4x	620	°C	10	x	
Directional transposition		R/W	4x	621	K	10	x	

Heating circuit 3

Circulator pump	Q20	R	3x	1001	0=Off / 1=On	1	x	
Mixing valve	TV3	R	3x	1002	%			
Room temperature	B53	R	3x	1003	°C			
Supply water temperature	B14	R	3x	1004	°C			
Supply water setpoint		R/W	4x	1022	°C			
Summer/winter mode		R/W	4x	1008	Refer to 8)	1	x	

Heating circuit 3 Settings

Comfort setpoint		R/W	4x	1001	°C	10	x	
Normal setpoint		R/W	4x	1023	°C	10	x	
Reduced setpoint		R/W	4x	1002	°C	10	x	
Supply water min. setpoint		R/W	4x	1004	°C	10	x	
Supply water max. setpoint		R/W	4x	1005	°C	10	x	
Summer/winter outdoor temperature setpoint		R/W	4x	1006	°C	10	x	
Heating curve – Supply water Y1		R/W	4x	1012	°C	10	x	
Heating curve – Supply water Y2		R/W	4x	1014	°C	10	x	

Heating circuit 3 Settings	ID	Read/Write (R/W)	Register type 1)	Register address	Unit	Resolution (divisor) 2)	Device 1 (master)	Devices 2, 3 etc. (slave)
Heating curve – Supply water Y3		R/W	4x	1016	°C	10	x	
Heating curve – Supply water Y4		R/W	4x	1018	°C	10	x	
Heating curve – Supply water Y5		R/W	4x	1020	°C	10	x	
Directional transposition		R/W	4x	1021	K	10	x	
Cooling circuit 1								
Circulator pump	Q24	R	3x	1251	0=Off / 1=On	1	x	
Mixing valve	TV11	R	3x	1253	%	1	x	
Room temperature		R	3x	1254	°C	10	x	
Supply water temperature	B16	R	3x	1255	°C	10	x	
Supply water setpoint		R	4x	1271	°C	10	x	
Cooling circuit 1 Settings								
Comfort setpoint		R/W	4x	1251	°C	10	x	
Normal setpoint		R/W	4x	1272	°C	10	x	
Reduced setpoint		R/W	4x	1252	°C	10	x	
Supply water min. setpoint		R/W	4x	1254	°C	10	x	
Supply water max. setpoint		R/W	4x	1255	°C	10	x	
Summer/winter outdoor temperature setpoint		R/W	4x	1256	°C	10	x	
Heating curve – Supply water Y1		R/W	4x	1261	°C	10	x	
Heating curve – Supply water Y2		R/W	4x	1263	°C	10	x	
Heating curve – Supply water Y3		R/W	4x	1265	°C	10	x	
Heating curve – Supply water Y4		R/W	4x	1267	°C	10	x	
Heating curve – Supply water Y5		R/W	4x	1269	°C	10	x	
Directional transposition		R/W	4x	1270	K	10	x	
Cooling circuit 2								
Circulator pump	Q26	R	3x	1257	0=Off / 1=On	1	x	
Mixing valve	TV22	R	3x	1259	%	1	x	
Room temperature		R	3x	1260	°C	10	x	
Supply water temperature	B26	R	3x	1261	°C	10	x	
Supply water setpoint		R	4x	1295	°C	10	x	

Cooling circuit 2 Settings	ID	Read/Write (R/W)	Register type 1)	Register address	Unit	Resolution (divisor) 2)	Device 1 (master)	Devices 2, 3 etc. (slave)
Comfort setpoint		R/W	4x	1274	°C	10	x	
Normal setpoint		R/W	4x	1296	°C	10	x	
Reduced setpoint		R/W	4x	1275	°C	10	x	
Supply water min. setpoint		R/W	4x	1278	°C	10	x	
Supply water max. setpoint		R/W	4x	1279	°C	10	x	
Summer/winter outdoor temperature setpoint		R/W	4x	1280	°C	10	x	
Heating curve – Supply water Y1		R/W	4x	1285	°C	10	x	
Heating curve – Supply water Y2		R/W	4x	1287	°C	10	x	
Heating curve – Supply water Y3		R/W	4x	1289	°C	10	x	
Heating curve – Supply water Y4		R/W	4x	1291	°C	10	x	
Heating curve – Supply water Y5		R/W	4x	1293	°C	10	x	
Directional transposition		R/W	4x	1294	K	10	x	

Alert registers

Alert status		R	3x	199	Refer to 6)			
Resetting alerts		R/W	0x	101	1 = acknowledgement		x	x
Domestic hot water accumulator temperature (upper sensor)	B2	R	1x	701	0 = normal / 1 = alert		x	
Domestic hot water accumulator temperature (lower sensor)	B3	R	1x	702	0 = normal / 1 = alert		x	
Domestic hot water supply temperature	B38	R	1x	708	0 = normal/1 = alert		x	
Domestic hot water circulation temperature	B39	R	1x	709	0 = normal/1 = alert		x	
Cascade supply water temperature	B10	R	1x	901	0 = normal / 1 = alert		x	
System supply water temperature	B11	R	1x	805	0 = normal/1 = alert		x	
Outdoor temperature	B9	R	1x	101	0 = normal/1 = alert		x	
Circuit 2 supply water temperature	B12	R	1x	604	0 = normal / 1 = alert		x	
Circuit 3 supply water temperature	B14	R	1x	1004	0 = normal/1 = alert		x	

Alert registers	ID	Read/Write (R/W)	Register type 1)	Register address	Unit	Resolution (divisor) 2)	Device 1 (master)	Devices 2, 3 etc. (slave)
Common source pump	Q8C	R	1x	903	0 = normal / 1 = alert		x	
Change-over valve	Q3	R	1x	704	0 = normal / 1 = alert		x	x
Domestic hot water electric heater	K6	R	1x	703	0 = normal / 1 = alert		x	
Electric heater 1 and 2	K25/K26	R	1x	801	0 = normal / 1 = alert		x	
Compressor 1	K1	R	1x	310	0 = normal / 1 = alert		x	x
Compressor 1 feedback	K1	R	1x	311	0 = normal / 1 = alert		x	x
Compressor 2	K2	R	1x	315	0 = normal/1 = alert		x	x
Compressor 2 feedback	K2	R	1x	316	0 = normal/1 = alert		x	x
Expansion valve		R	1x	314	0 = normal / 1 = alert		x	x
Supply water	B21	R	1x	201	0 = normal / 1 = alert		x	x
Return water	B71	R	1x	202	0 = normal / 1 = alert		x	x
Collector inbound	B91	R	1x	301	0 = normal / 1 = alert		x	x
Collector out	B92	R	1x	302	0 = normal / 1 = alert		x	x
Hot gas temperature	B81	R	1x	303	0 = normal / 1 = alert		x	x
Evaporator pressure	H82	R	1x	304	0 = normal / 1 = alert		x	x
Condenser pressure	H83	R	1x	305	0 = normal / 1 = alert		x	x
Collector control valve / source pump	Y8/ Q8	R	1x	306	0 = normal / 1 = alert		x	x
Intake gas temperature	B85	R	1x	307	0 = normal / 1 = alert		x	x
Charge pump	Q9	R	1x	204	0 = normal / 1 = alert		x	x
Electricity meter communications		R	1x	102	0 = normal / 1 = alert		x	x

Alert registers	ID	Read/Write (R/W)	Register type 1)	Register address	Unit	Resolution (divisor) 2)	Device 1 (master)	Devices 2, 3 etc. (slave)
No. IO not available		R	1x	193	0 = normal / 1 = alert		x	x
No. IO in manual operation		R	1x	194	0 = normal / 1 = alert		x	x
External IO error		R	1x	197	0 = normal / 1 = alert		x	x
Communication module changed		R	1x	198	0 = normal / 1 = alert		x	x
Archive full		R	1x	196	0 = normal / 1 = alert		x	x
High-priority alert		R	1x	191	0 = normal / 1 = alert		x	x
Low-priority alert		R	1x	192	0 = normal / 1 = alert		x	x
Maximum high pressure		R	1x	321	0 = normal / 1 = alert		x	x
Minimum high pressure		R	1x	322	0 = normal / 1 = alert		x	x
MOP		R	1x	323	0 = normal / 1 = alert		x	x
LOP		R	1x	324	0 = normal / 1 = alert		x	x
Maximum pressure ratio		R	1x	325	0 = normal / 1 = alert		x	x
Minimum pressure ratio		R	1x	326	0 = normal / 1 = alert		x	x
Expansion valve open		R	1x	329	0 = normal / 1 = alert		x	x
Overpressure switch		R	1x	327	0 = normal / 1 = alert		x	x
Underpressure switch		R	1x	328	0 = normal / 1 = alert		x	x
Evaporator temperature		R	1x	330	0 = normal / 1 = alert		x	x
Condensate temperature		R	1x	331	0 = normal / 1 = alert		x	x
Superheating		R	1x	332	0 = normal / 1 = alert		x	x
Frequency converter communication		R	1x	333	0 = normal / 1 = alert		x	x

Alert registers	ID	Read/Write (R/W)	Register type 1)	Register address	Unit	Resolution (divisor) 2)	Device 1 (master)	Devices 2, 3 etc. (slave)
No pressure change		R	1x	335	0 = normal / 1 = alert		x	x
No compressor available		R	1x	336	0 = normal / 1 = alert		x	x
All comp. alert		R	1x	337	0 = normal / 1 = alert		x	x
Cascade master communication		R	1x	902	0 = normal/1 = alert			x
Cascade slave 1 communication		R	1x	904	0 = normal/1 = alert		x	
Cascade slave 2 communication		R	1x	905	0 = normal/1 = alert		x	

1) 0x = Coil Register
1x = Discrete input
3x = Input register
4x = Holding register
Coil registers (0x) can be read using function code 01 and written using function codes 05 (single) and 15 (multiple).
Discrete inputs (1x) can be read using function code 02.
Input registers (3x) can be read using function code 04.
Holding registers (4x) can be read using function code 03 and written using function codes 06 (single) and 16 (multiple).

2) The read value must be divided by the value in the Resolution field to obtain the measured value.

3) 0 = 1 and 2 off
1 = 1 on and 2 off
2 = 1 off and 2 on
3 = 1 and 2 on

4) 0 = Auto
1 = Protection
2 = Reduced
3 = Normal
4 = Comfort

5) 0 = Auto
1 = Off
2 = -------
3 = Reserve heat

6) 0 = No alerts
1 = Active alerts
2 = Active reset alerts

7) The temperatures of certain sensors (such as the CW accumulator) can be entered into the heat pumps from the VAK, thereby avoiding duplicating sensors.

8 0 = Outdoor temperature:
1 = ------
2 = Summer
3 = Winter

9) 32-bit data format: Unsigned integer, little endian, byte swap

10 1 = Off
2 = On
3 = Freeze protection active

11) 1 = Off
2 = Standby
3 = Passive cooling
4 = Active cooling
5 = Freeze protection active

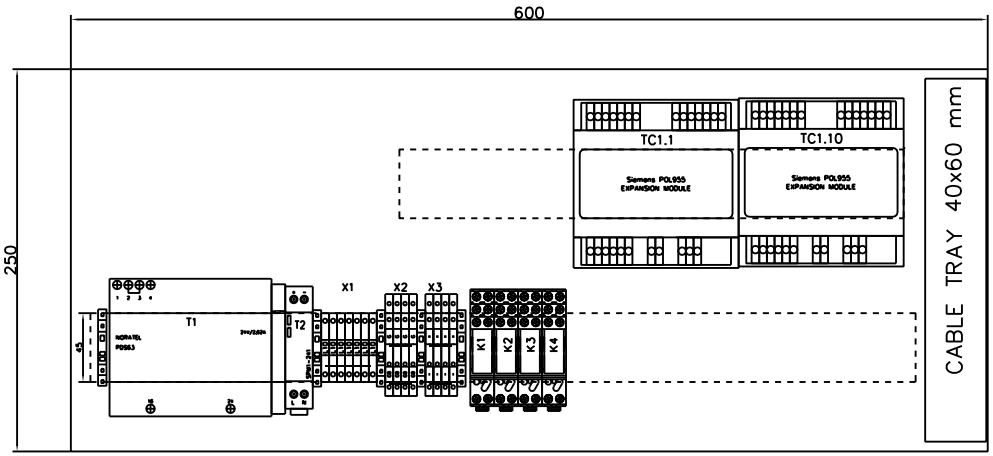

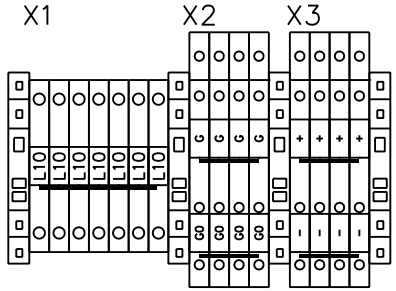

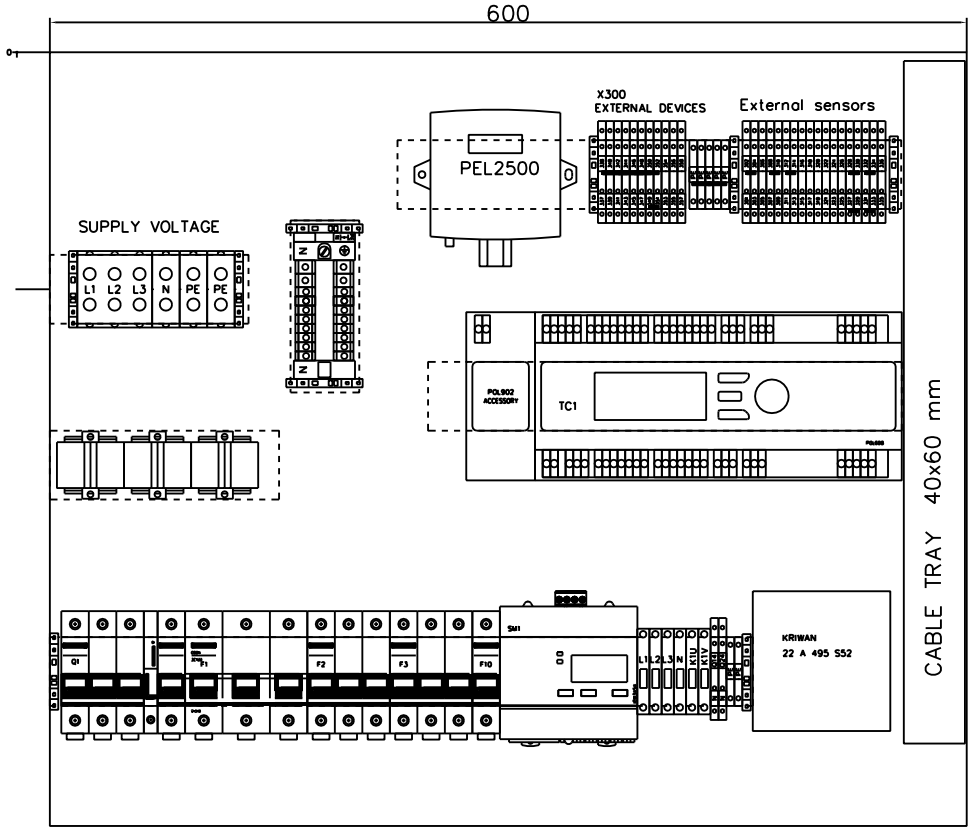

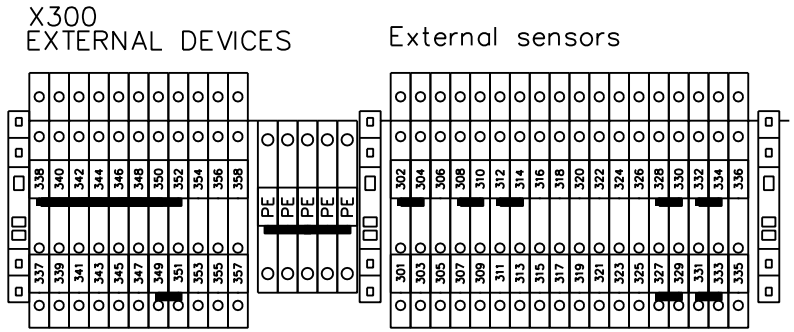

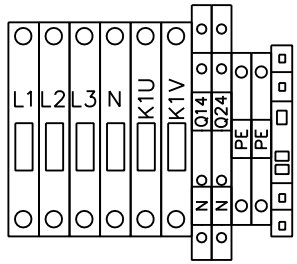

TECHNICAL DETAILS G-ECO PRO			
1. SUPPLY VOLTAGE	Un	400	V
2. CURRENT	In	73,6	A
3. CONTROL VOLTAGE	U	230	V
4. IP-CLASS	IP	21	
5. MAX. TEMPERATURE		35°C	
6. Icw		6 kA	

TECHNICAL DETAILS G-ECO PRO HT			
1. SUPPLY VOLTAGE	Un	400	V
2. CURRENT	In	97,1	A
3. CONTROL VOLTAGE	U	230	V
4. IP-CLASS	IP	21	
5. MAX. TEMPERATURE		35°C	
6. Icw		6 kA	

D rev
E rev
F rev
A rev
B Rev.
C Rev.

GEBWELL

G-ECO PRO / PRO HT
CONTROL CABINET
LAYOUT

Plan. KT /23.2.2026	Object ID	CABINET	Job no.
Draw. KT	Sheet 1/21	Drawing no. EL EL158	
Check			

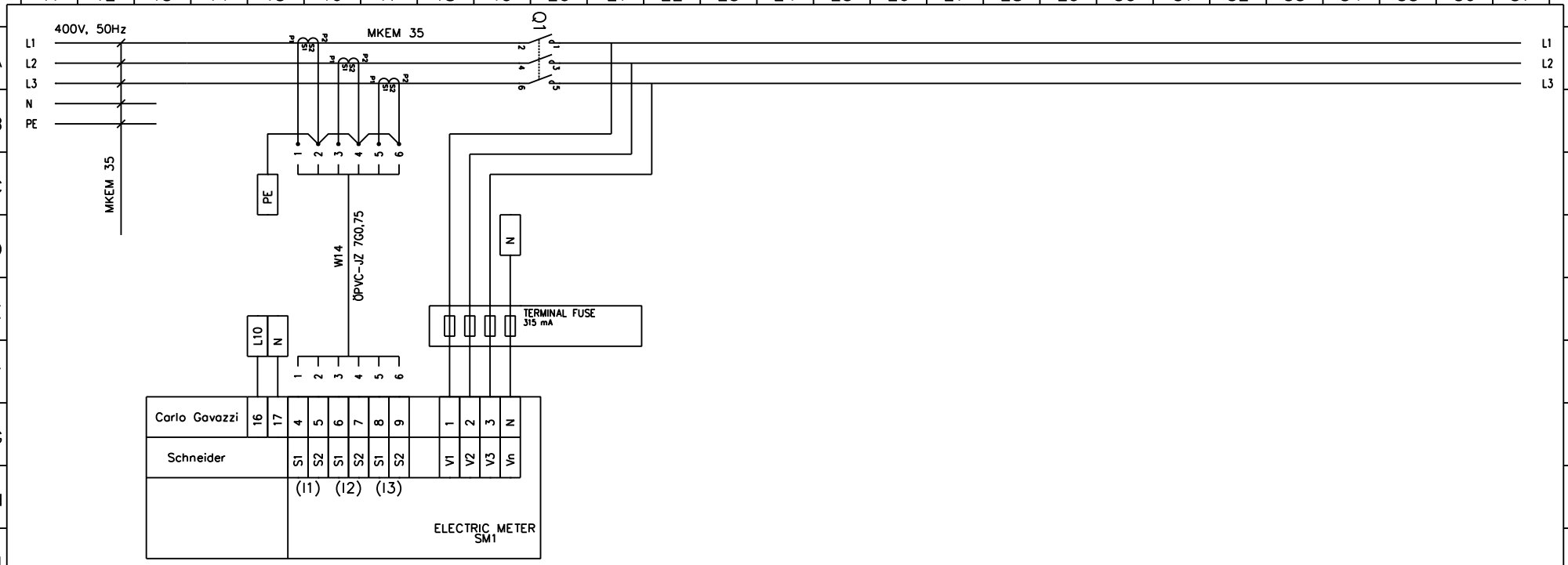

D rev
E rev
F rev
A rev
B Rev.
C Rev.

GEBWELL

G-ECO PRO / PRO HT
CONTROL CABINET
CIRCUIT DIAGRAM

Plan. KT /23.2.2026	Object ID	CABINET	Job no.
Draw. KT	Sheet 2/21	Drawing no. EL EL158	
Check			

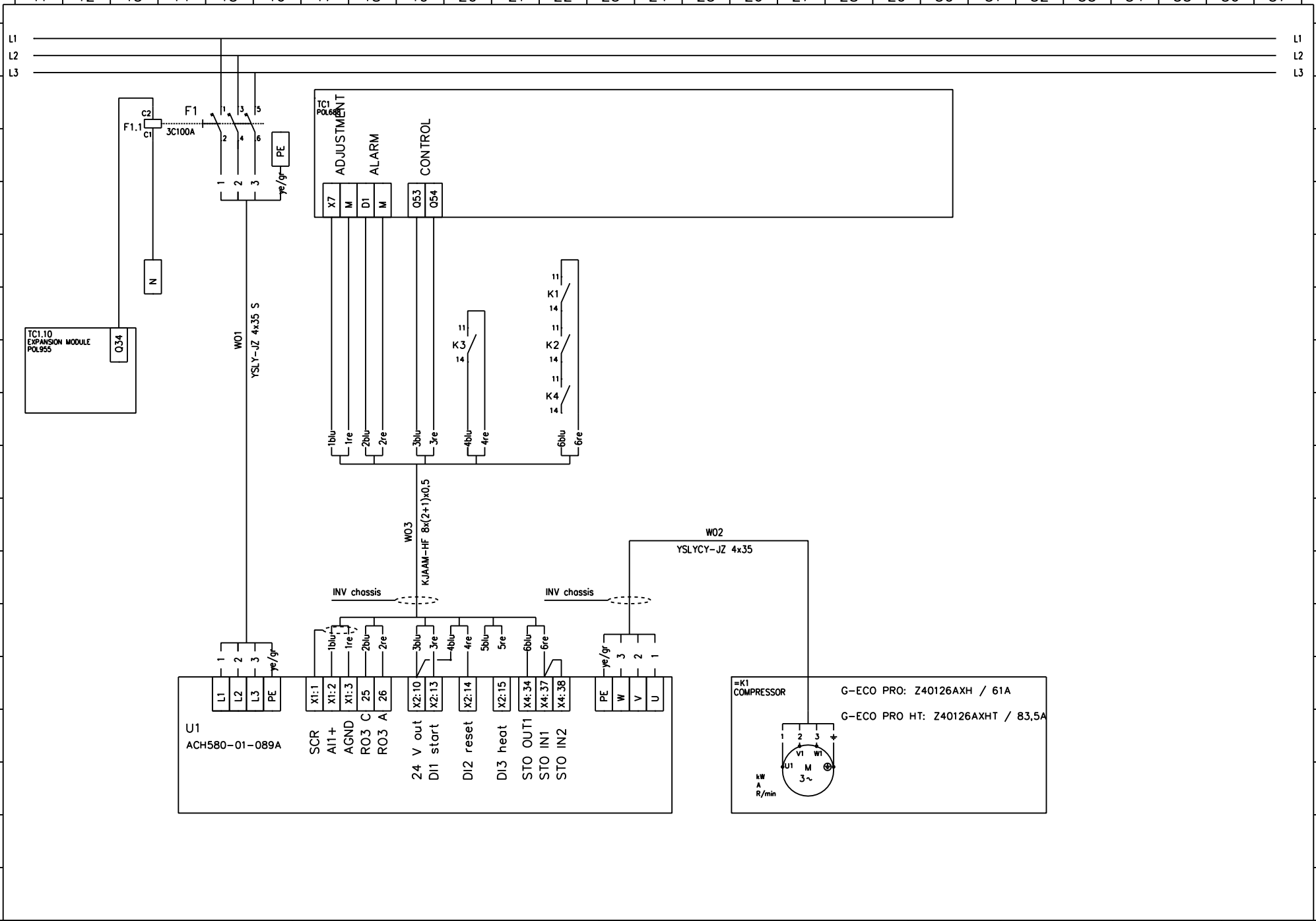

GEBWELL	G-ECO PRO / PRO HT COMPRESSOR CIRCUIT DIAGRAM	Plan. KT /23.2.2026	Object ID	CABINET	Job no.
		Draw. KT	Sheet 3/21	Drawing no. EL EL158	
		Check			

D rev
E rev
F rev
A rev
B Rev.
C Rev.

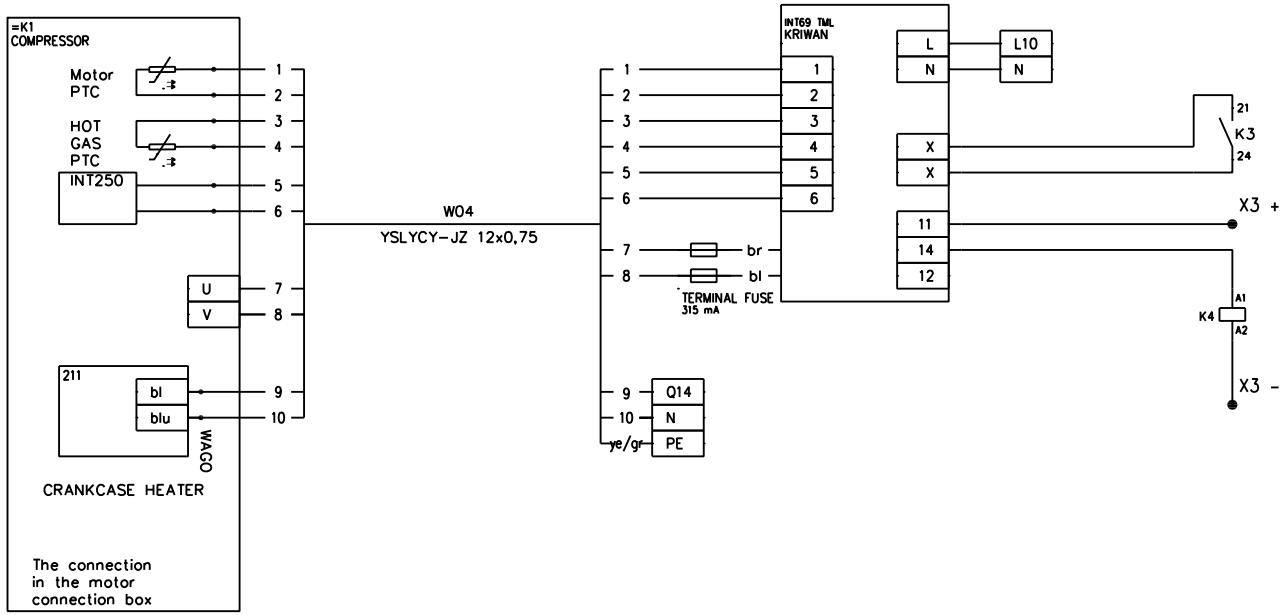

GEBWELL	G-ECO PRO / PRO HT Compressor protection CIRCUIT DIAGRAM	Plan. KT /23.2.2026	Object ID	CABINET	Job no.
		Draw. KT	Sheet 4 / 21	Drawing no. EL EL158	
		Check			

D rev
E rev
F rev
A rev
B Rev.
C Rev.

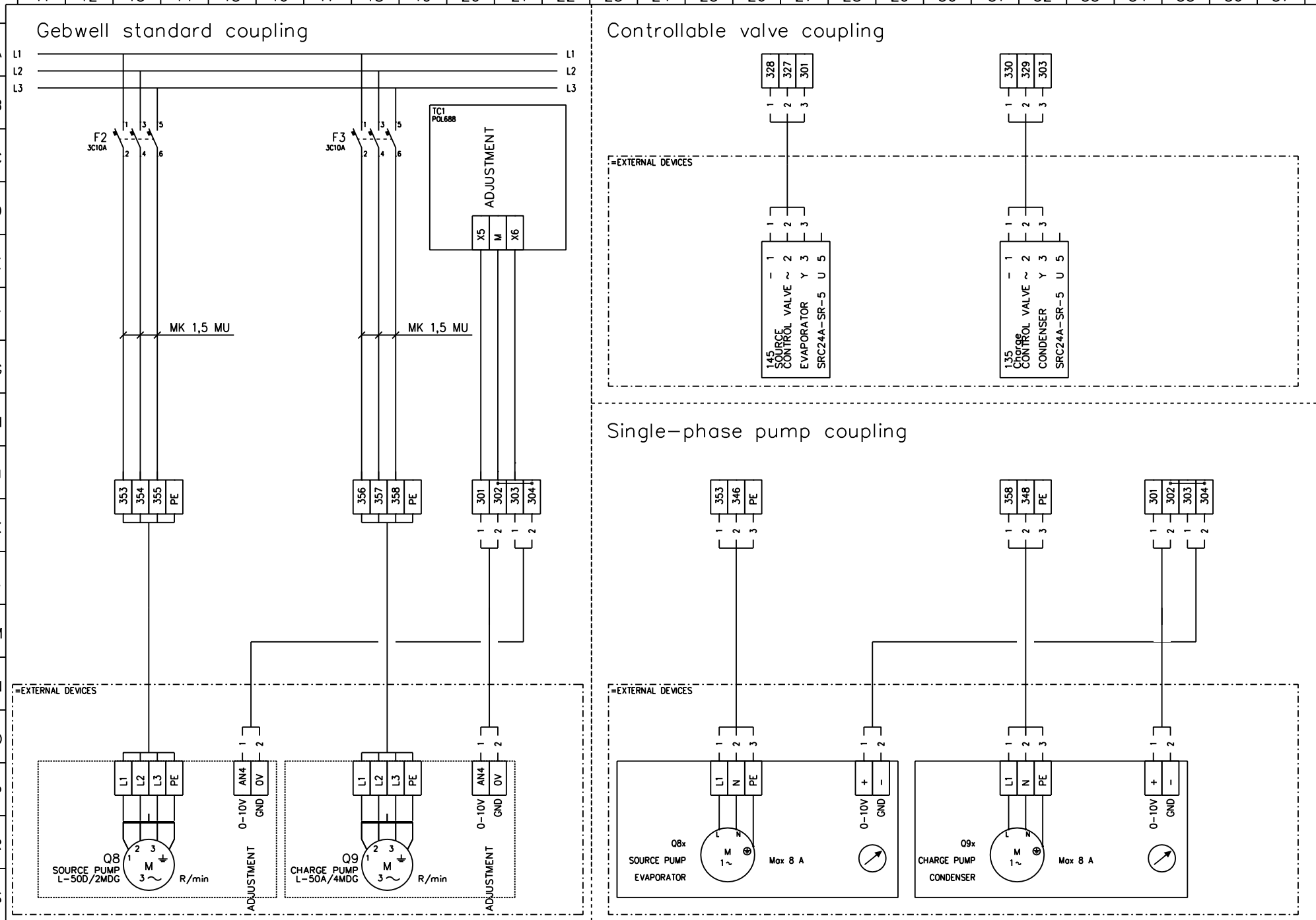

D rev
E rev
F rev
A rev
B Rev.
C Rev.

GEBWELL

G-ECO PRO / PRO HT
Source and charge pump
CIRCUIT DIAGRAM

Plan. KT /23.2.2026	Object ID	CABINET	Job no.
Draw. KT	Sheet 5 / 21	Drawing no. EL EL158	
Check			

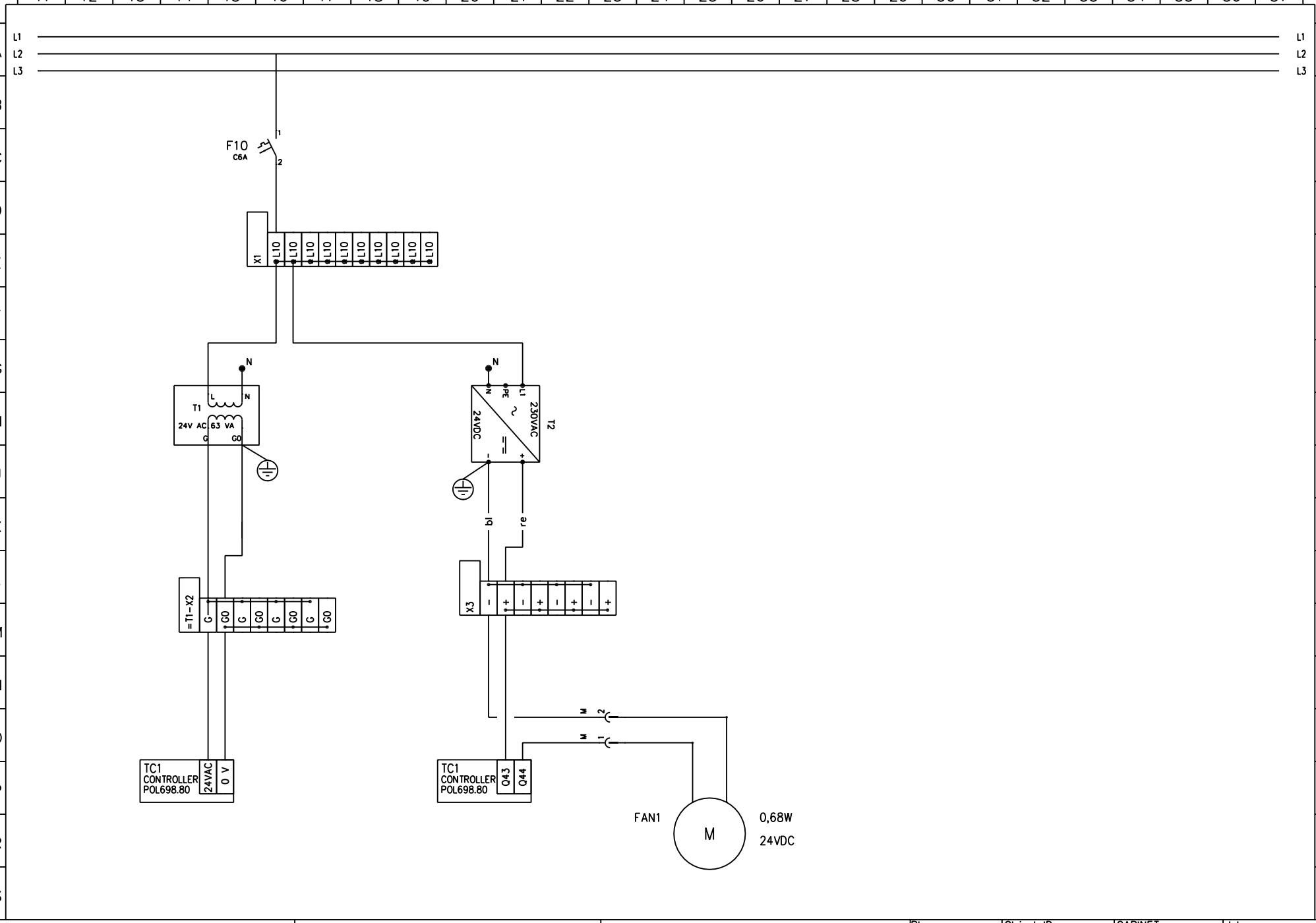

GEBWELL

G-ECO PRO / PRO HT
CONTROL CABINET
CIRCUIT DIAGRAM

Plan. KT /23.2.2026	Object ID	CABINET	Job no.
Draw. KT	Sheet 6/21	Drawing no. EL EL158	
Check			

D rev
E rev
F rev
A rev
B Rev.
C Rev.

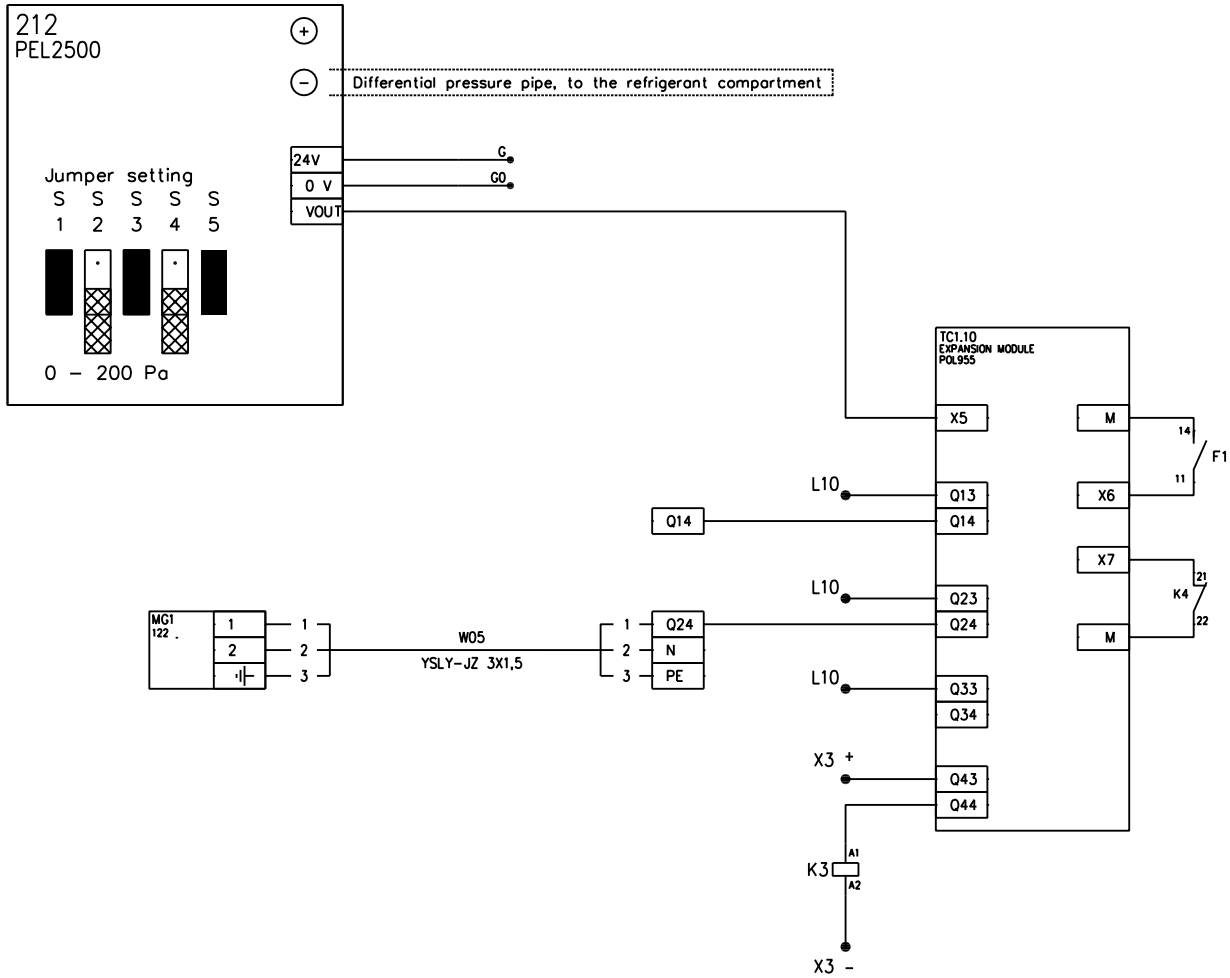

D rev
E rev
F rev
A rev
B Rev.
C Rev.

GEBWELL

G-ECO PRO / PRO HT
TC1.10
CIRCUIT DIAGRAM

Plan. KT /23.2.2026	Object ID	CABINET	Job no.
Draw. KT	Sheet 7/21	Drawing no. EL EL158	
Check			

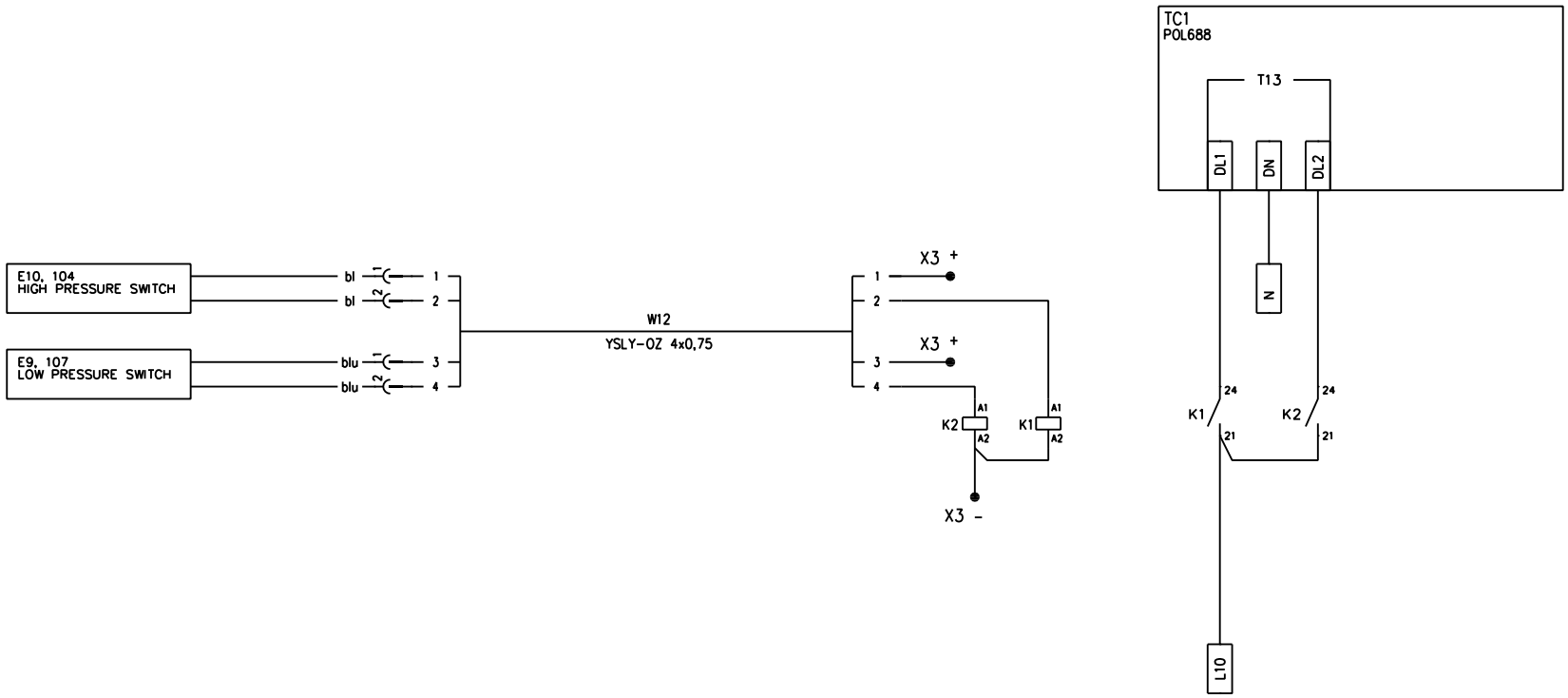

GEBWELL

G-ECO PRO / PRO HT
pressure switches
CIRCUIT DIAGRAM

Plan. KT /23.2.2026	Object ID	CABINET	Job no.
Draw. KT	Sheet 8/21	Drawing no. EL EL158	
Check			

D rev
E rev
F rev
A rev
B Rev.
C Rev.

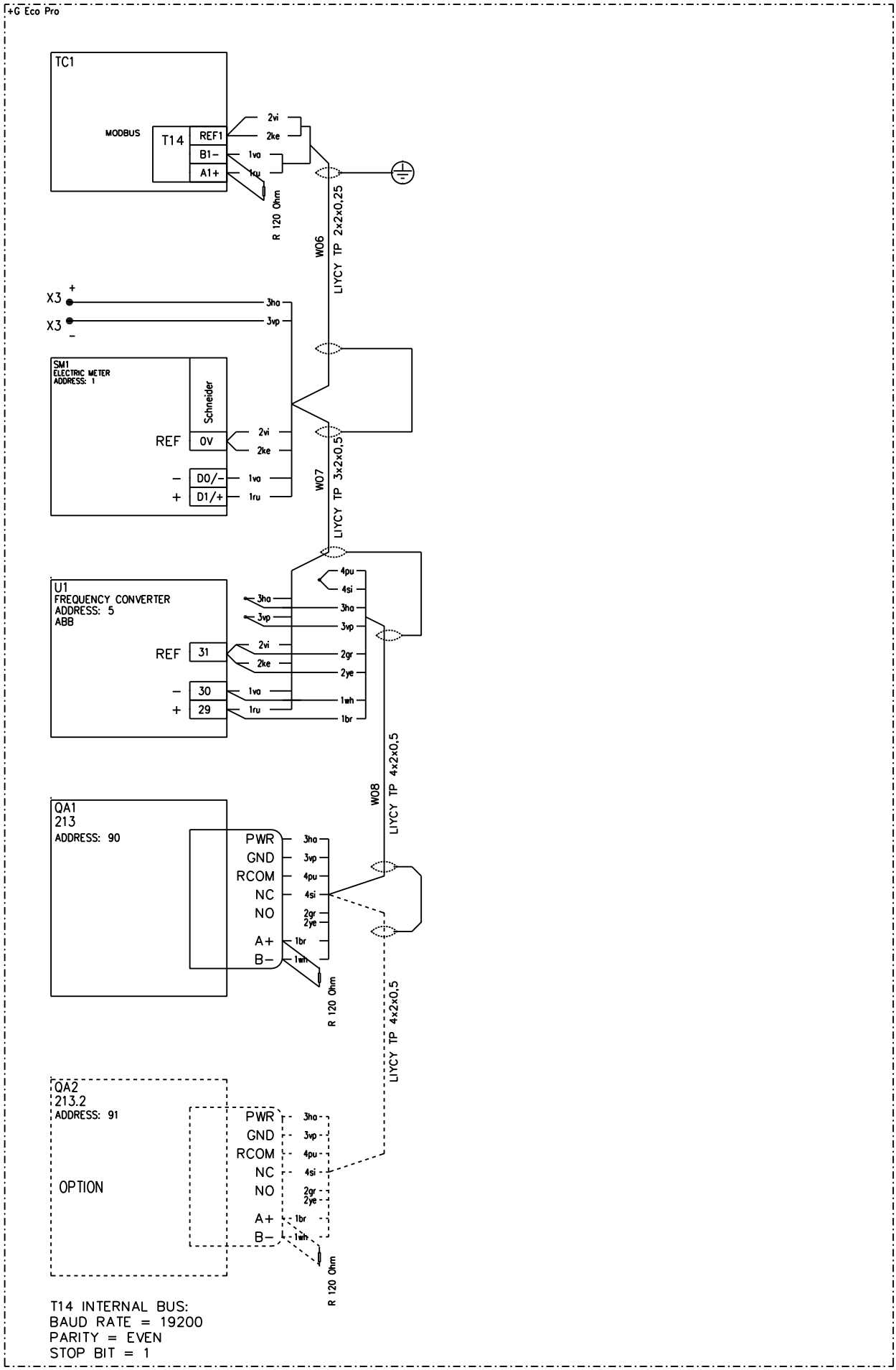

GEBWELL	G-ECO PRO / PRO HT MODBUS INTERNAL BUS	Plan. KT /23.2.2026	Object ID	CABINET	Job no.
		Draw. KT	Sheet 9/21	Drawing no. EL EL158	
		Check			

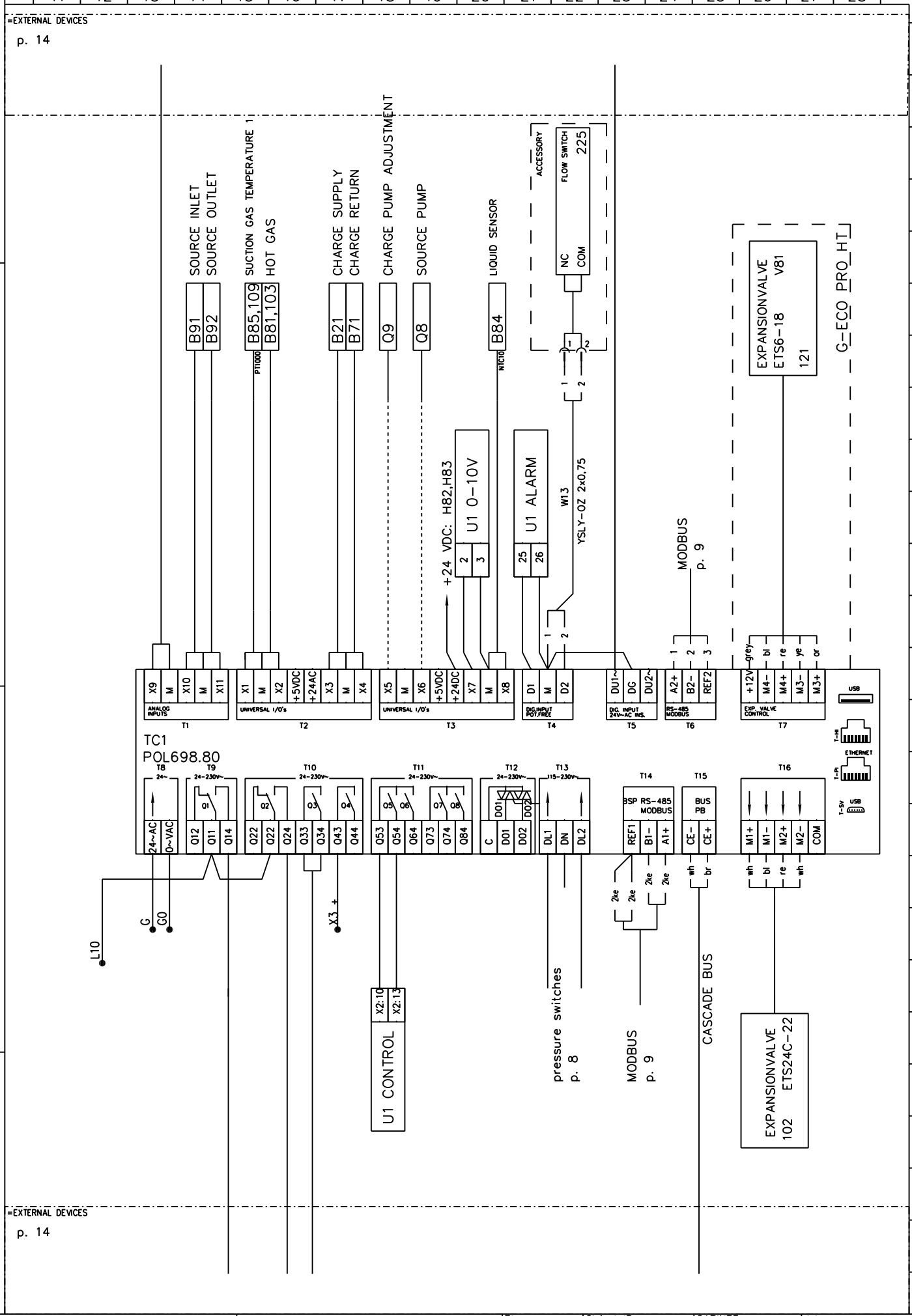

GEBWELL	G-ECO PRO / PRO HT CONTROLLER POINT LIST	Plan. KT /23.2.2026	Object ID	CABINET	Job no.
		Draw. KT	Sheet 10/21	Drawing no. EL EL158	
		Check			

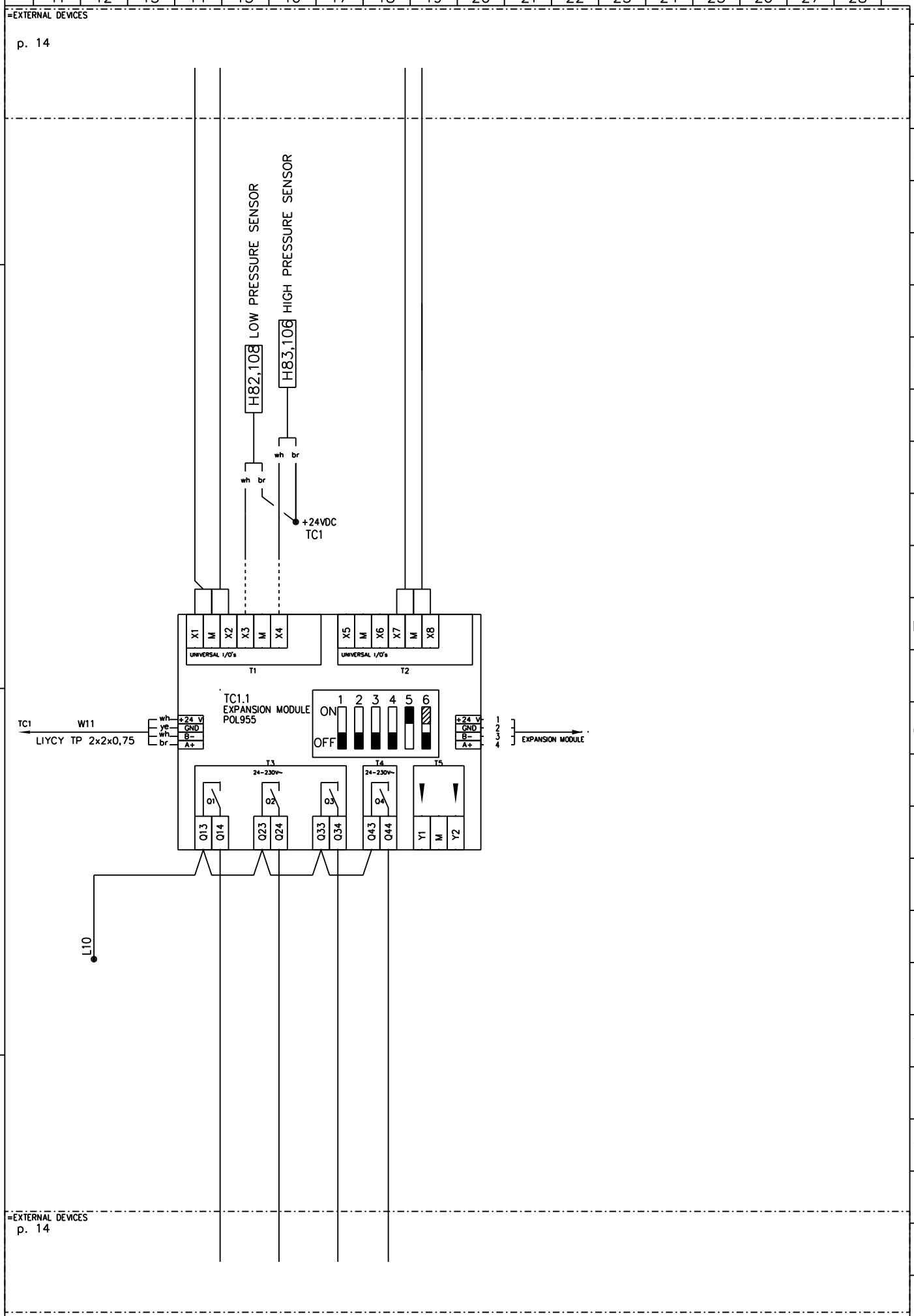

D rev
E rev
F rev
A rev
B Rev.
C Rev.

GEBWELL

G-ECO PRO / PRO HT
EXP. MODULE TC1.1
INTERNAL EXTENSION

Plan. KT /23.2.2026	Object ID	CABINET	Job no.
Draw. KT	Sheet 11/21	Drawing no. EL EL158	
Check			

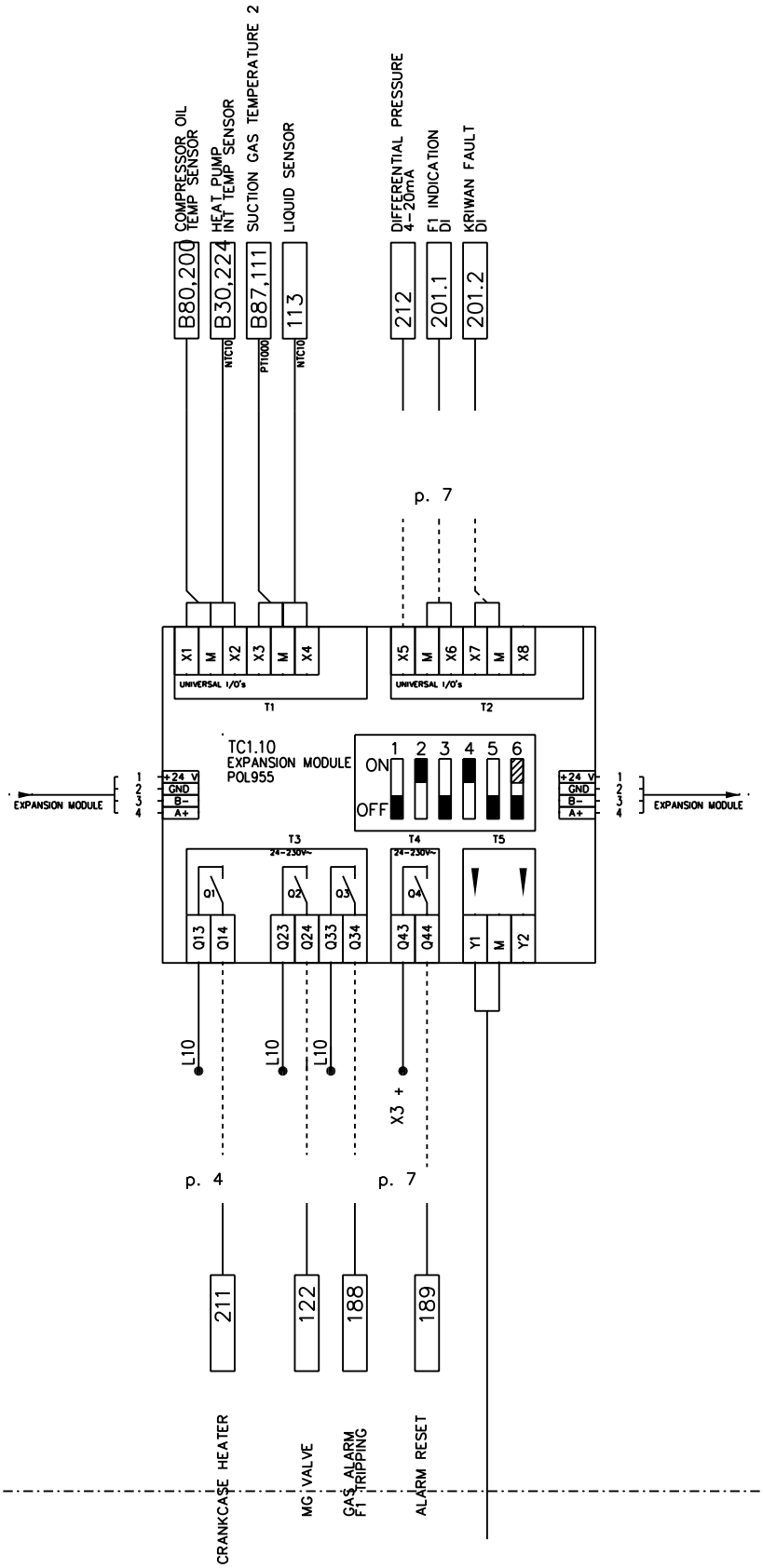

G-ECO PRO / PRO HT LAAJENUSMODUULI TC1.10 INTERNAL EXTENSION	Plan. KT /23.2.2026	Object ID	CABINET	Job no.
	Draw. KT	Sheet 12 / 21	Drawing no. EL EL158	
	Check			

D rev
E rev
F rev
A rev
B Rev.
C Rev.

A rev			D rev
B Rev.			E rev
C Rev.			F rev

GEBWELL

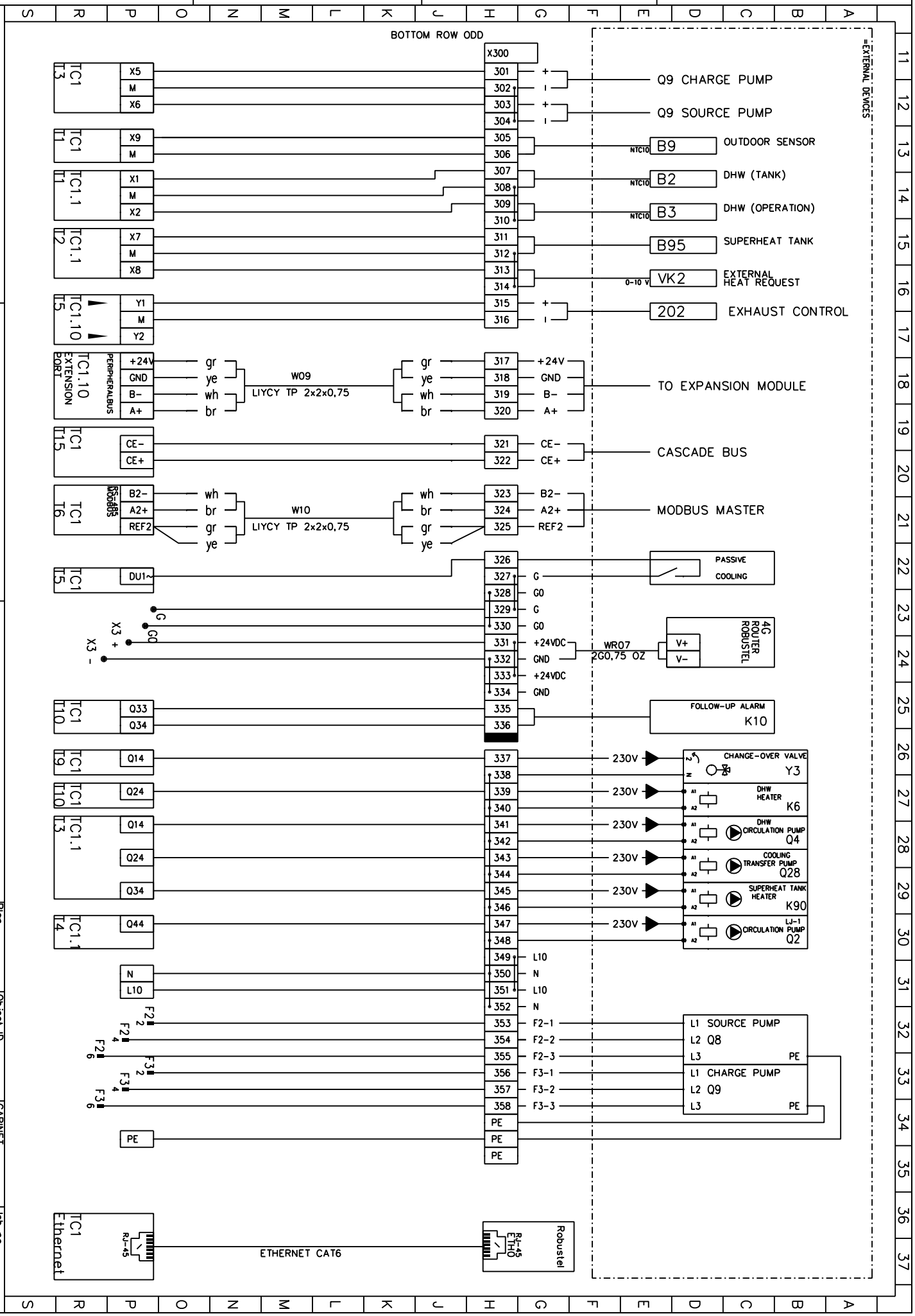

G-ECO PRO / PRO HT
EXTERNAL CONNECTIONS

Plan. KT	/23.2.2026	Object ID	
Drow. KT			
Check		Sheet 13/21	
Drawing no. EL EL158		CABINET	
		Job no.	

TERMINAL PACKET
EXTERNAL CONNECTIONS

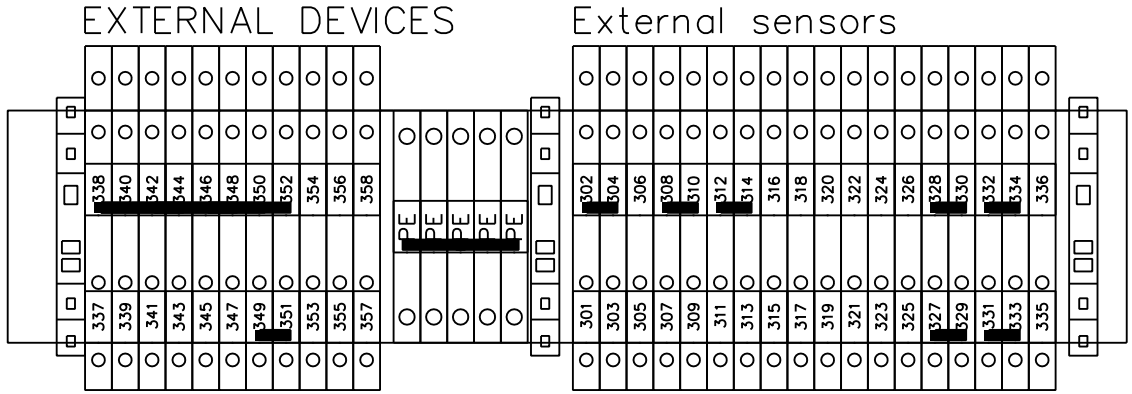

GEBWELL	G-ECO PRO / PRO HT EXTERNAL CONNECTIONS LAYOUT	Plan. KT /23.2.2026	Object ID	CABINET	Job no.
		Draw. KT	Sheet 14 / 21	Drawing no. EL EL158	
		Check			

A rev B Rev. C Rev. D rev E rev F rev

SINGLE HEAT PUMP SYSTEM

ROUTER EQUIPPED ON TOP OF HEAT PUMP

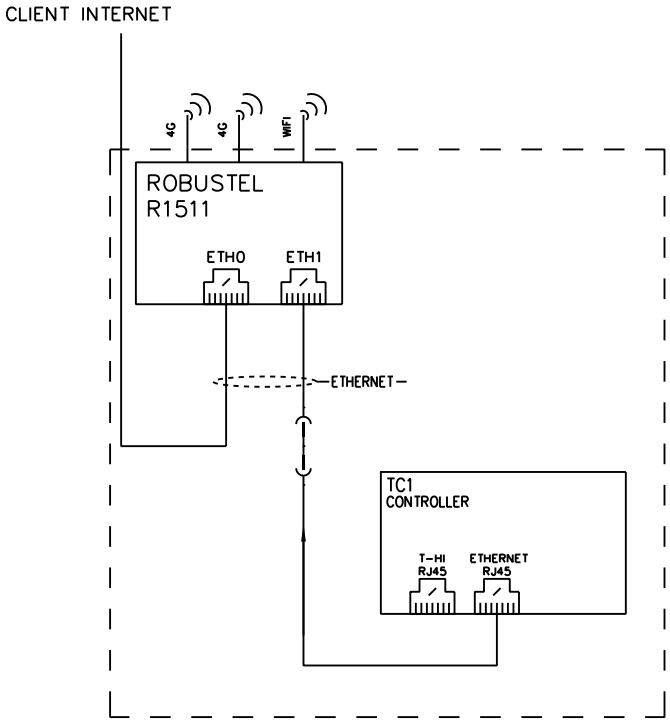

1–6 PCS HEAT PUMP SYSTEM
CONNECTED TO BUILDING AUTOMATION VIA TCP

ROUTER AND SWITCH IN EXTERNAL CASE

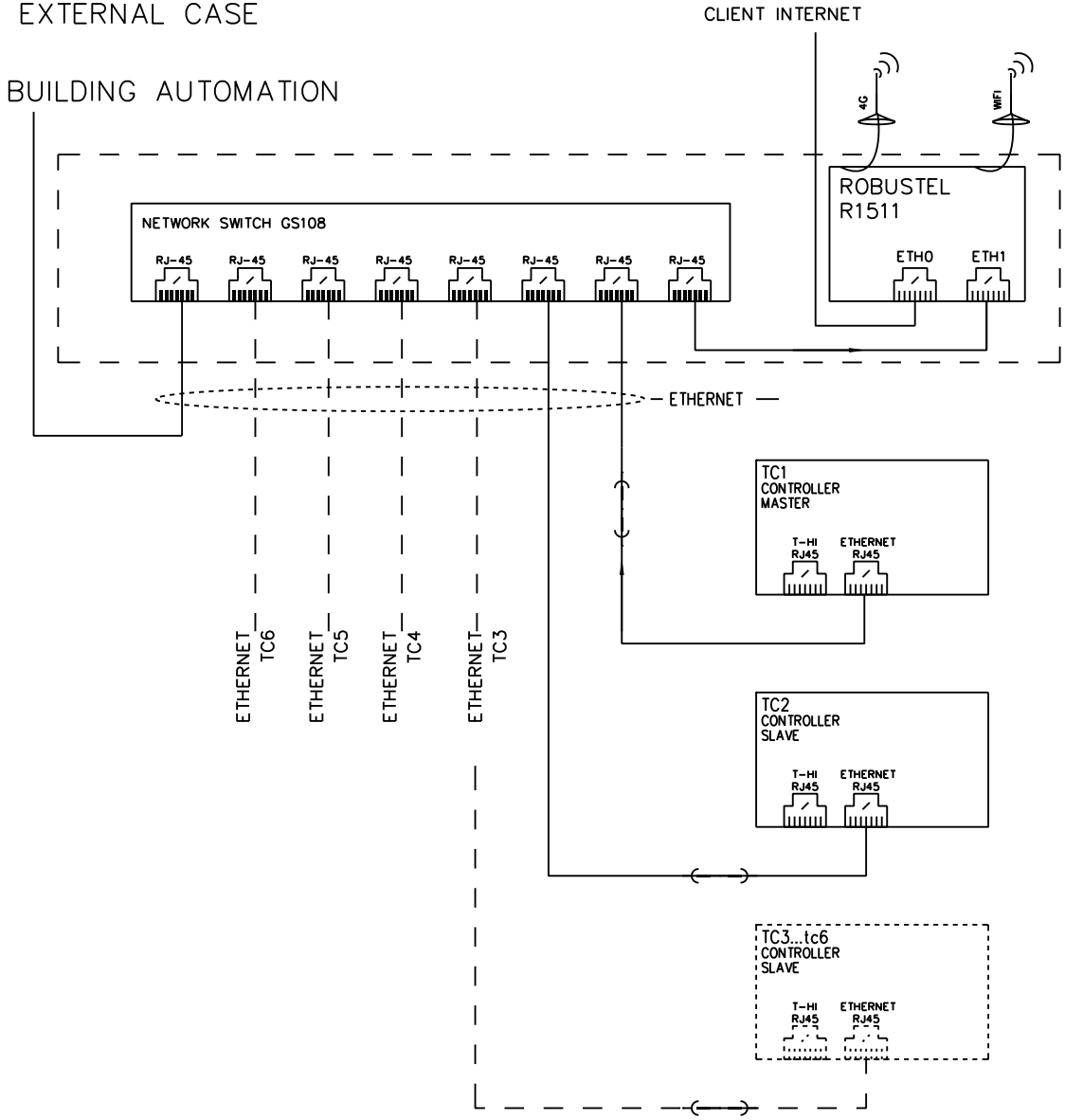

GEBWELL

G-ECO PRO / PRO HT
EXTERNAL BUS CONNECTIONS

Plan. KT /23.2.2026	Object ID	CABINET	Job no.
Draw. KT	Sheet 15/21	Drawing no. EL EL158	
Check			

D rev
E rev
F rev
A rev
B Rev.
C Rev.

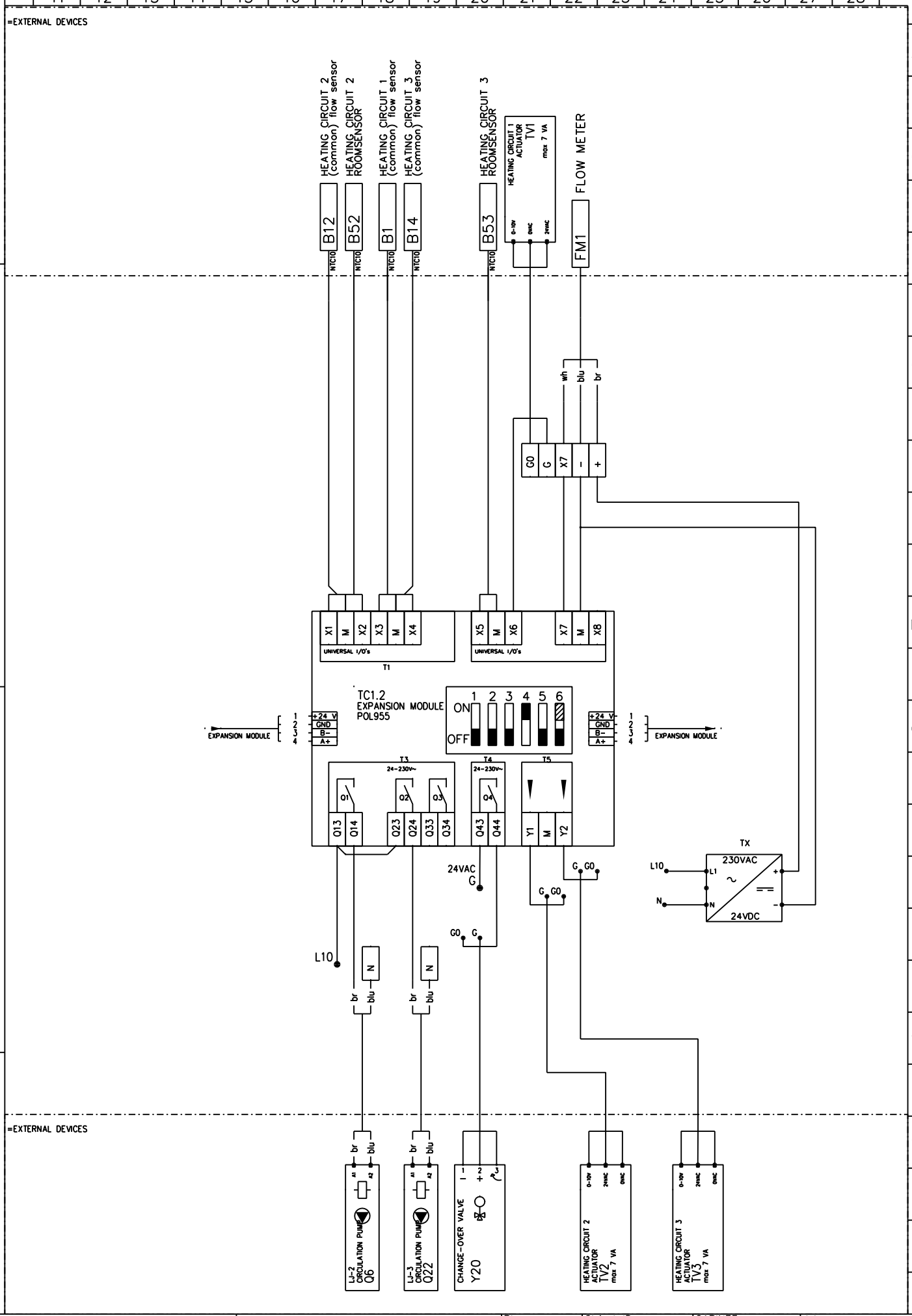

GEBWELL	G-ECO PRO / PRO HT EXP. MODULE TC1.2 HEATING	Plan. KT /23.2.2026	Object ID	CABINET	Job no.
		Draw. KT	Sheet 16 / 21	Drawing no. EL EL158	
		Check			

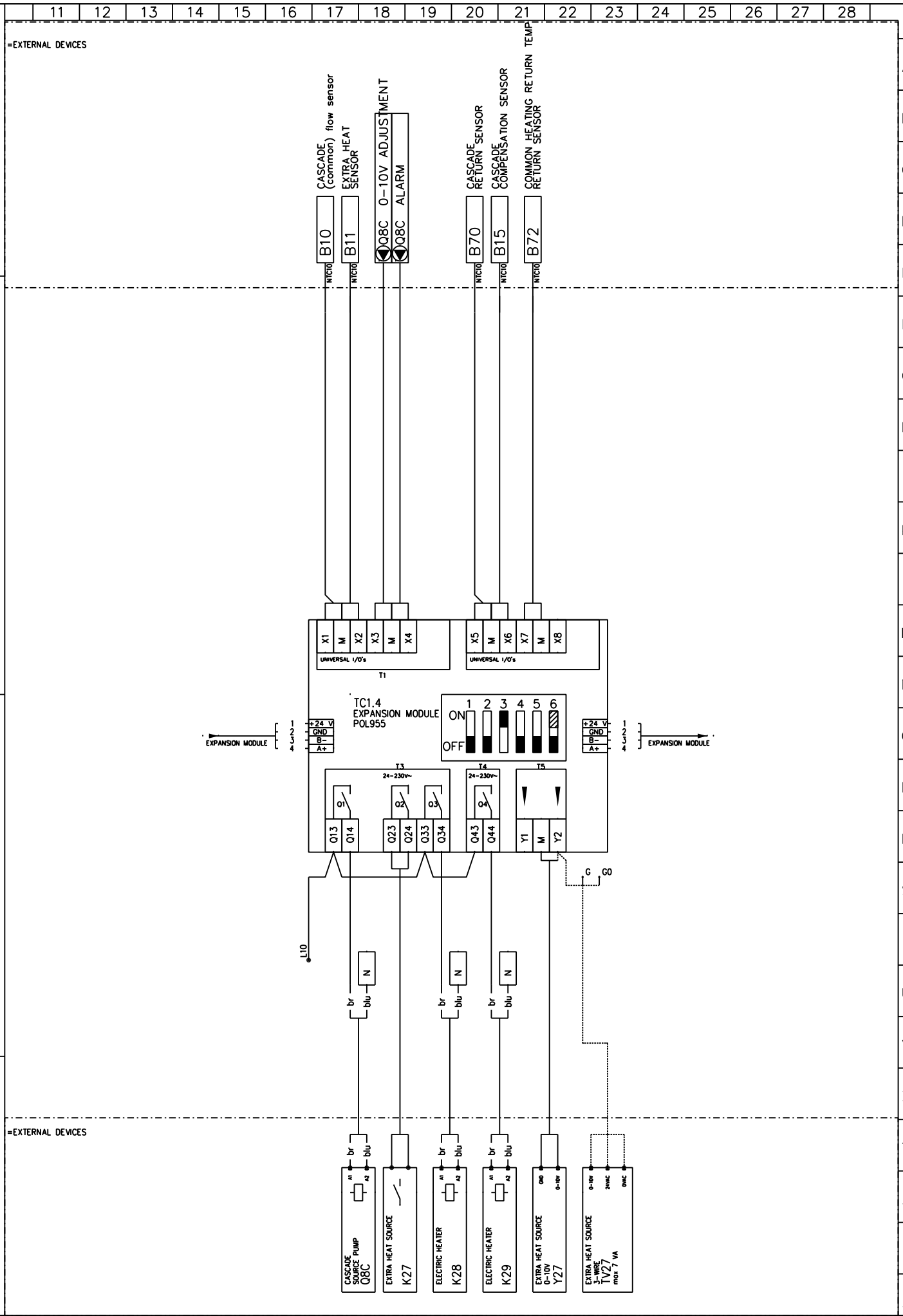

GEBWELL	G-ECO PRO / PRO HT EXP.MODULE TC1.4 CASCADE	Plan. KT /23.2.2026	Object ID	CABINET	Job no.
		Draw. KT	Sheet 17 / 21	Drawing no. EL EL158	
		Check			

D rev
E rev
F rev
A rev
B Rev.
C Rev.

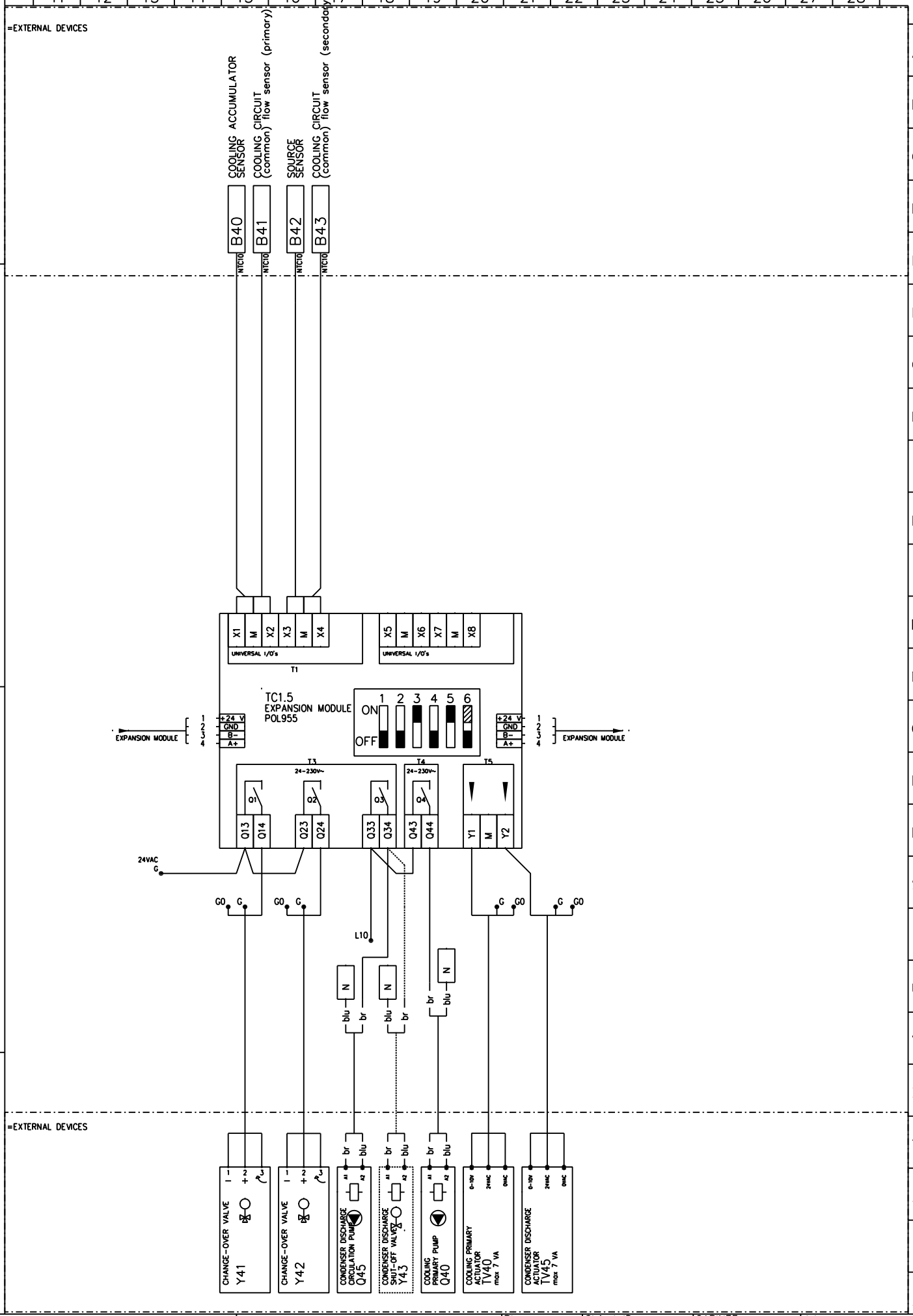

D rev
E rev
F rev
A rev
B Rev.
C Rev.

GEBWELL

G-ECO PRO / PRO HT
EXP. MODULE TC1.5
ACTIVE COOLING

Plan. KT /23.2.2026	Object ID	CABINET	Job no.
Draw. KT	Sheet 18/21	Drawing no. EL EL158	
Check			

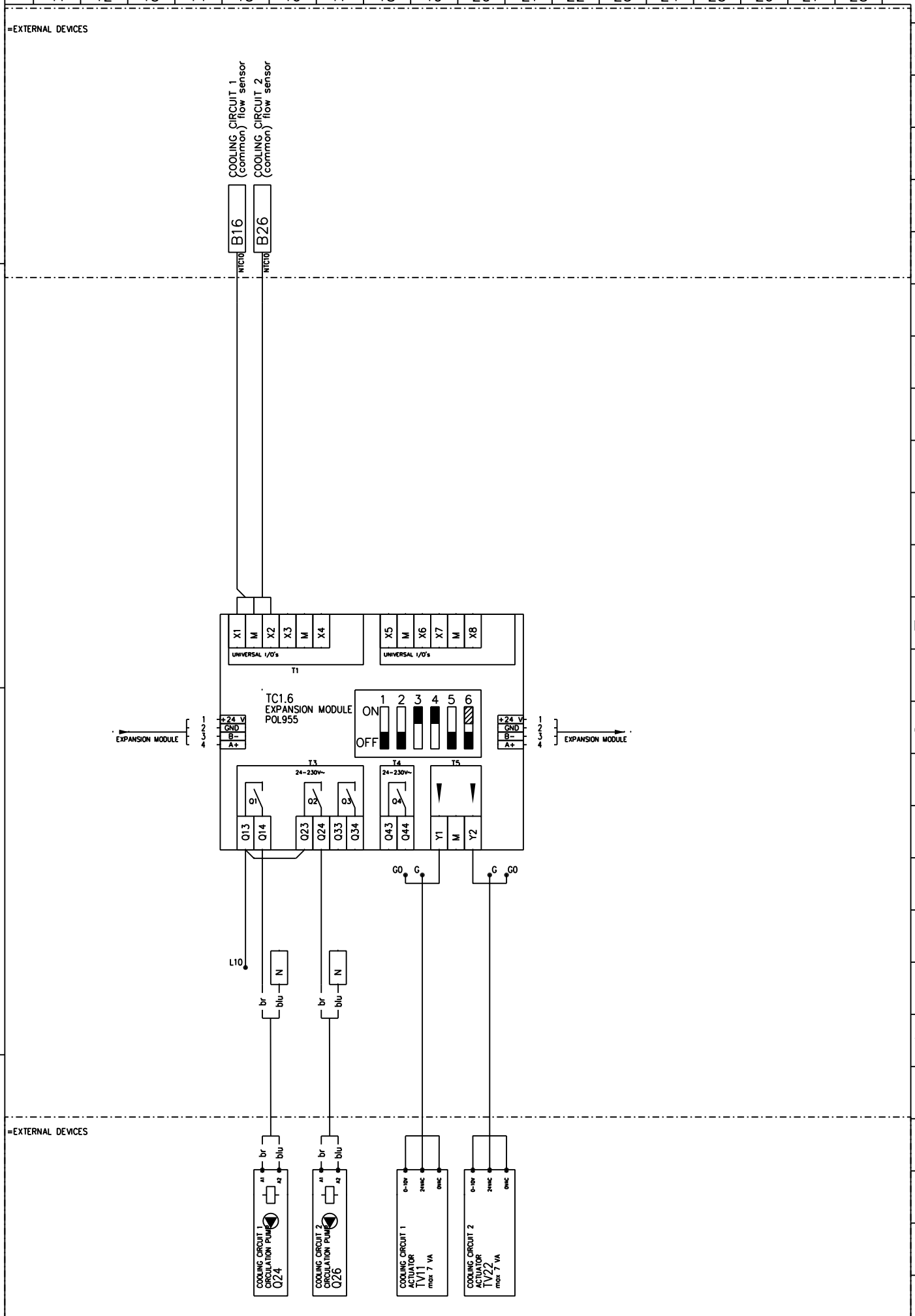

GEBWELL	G-ECO PRO / PRO HT EXP. MODULE TC1.6 COOLING CONTROL	Plan. KT /23.2.2026	Object ID	CABINET	Job no.
		Draw. KT	Sheet 19 / 21	Drawing no. EL EL158	
		Check			

D rev
E rev
F rev
A rev
B Rev.
C Rev.

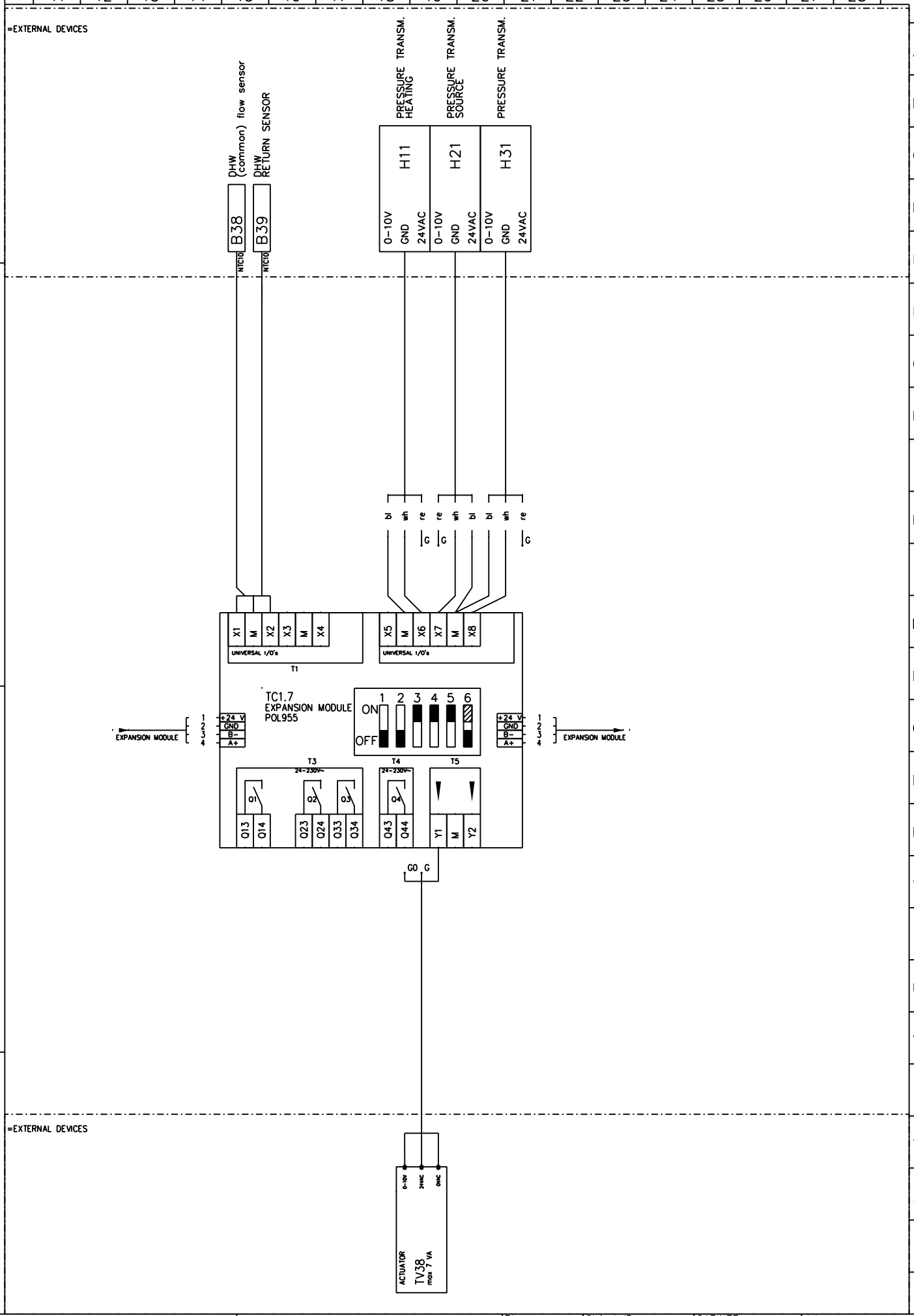

GEBWELL	G-ECO PRO / PRO HT EXP. MODULE TC1.7 DHW CONTROL	Plan. KT /23.2.2026	Object ID	CABINET	Job no.
		Draw. KT	Sheet 20 / 21	Drawing no. EL EL158	
		Check			

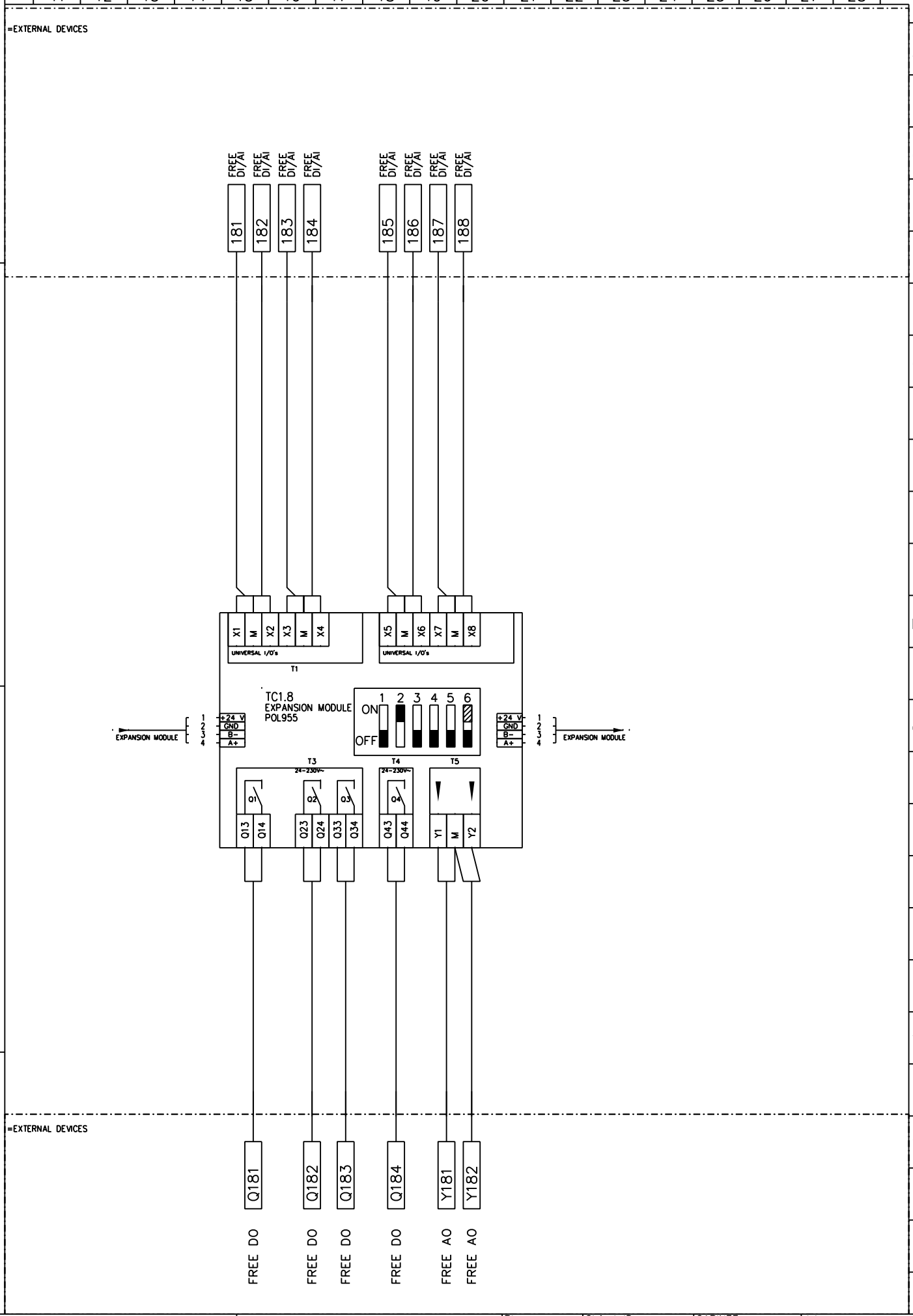

GEBWELL	G-ECO PRO / PRO HT EXP. MOD7LE TC1.8 FREE I/O	Plan. KT /23.2.2026	Object ID	CABINET	Job no.
		Draw. KT	Sheet 21/21	Drawing no. EL EL158	
		Check			

15 Declaration of conformity

GEBWELL

DoC_HP_0003.00

EU DECLARATION OF CONFORMITY

Object of the declaration:
Gebwell Heat pump

Product Model:
G-Eco Pro 120

Name and address of the manufacturer:
Gebwell Ltd.
Patruunapolku 5
79100 Leppavirta, Finland
Tel. +358 20 1230 800
www.gebwell.fi

This declaration of conformity is issued under the sole responsibility of the manufacturer.

The object of the declaration described above is in conformity with the relevant Union harmonisation legislation:

2014/68/EU	–	Pressure Equipment Directive (PED)
2014/35/EC	–	Low Voltage Directive (LVD)
2006/42/EC	–	Machinery Directive (MD)
2014/30/EC	–	Electromagnetic Compatibility Directive (EMC)
2011/65/EC	–	Restriction of Hazardous Substances Directive (RoHS)
2009/125/EC	–	EcoDesign requirements for space heaters and combination heaters (No 813/2013)

References to the relevant harmonised standards used or references to the other technical specifications in relation to which conformity is declared:

PED	–	EN 12735-1:2020, EN ISO 13585:2012, EN 14276-1:2020, EN 14276-2:2020
LVD	–	EN 61439-1:2021, EN 61439-2:2021
EMC	–	EN IEC 55014-1:2021, EN IEC 55014-2:2021
MD	–	EN 60 335-1:2012 A11:2014, EN 60335-2-40:2003/A13:2012/AC:2013,
Product	–	EN 378-2:2016, EN14511:1-4 :2022, SFS 6000:2022 (HD 60364, HD 60384)

PED conformity assessment procedure according to B (production type) + C2 – EU-Type examination (production type) + conformity to type based on internal production control plus supervised pressure equipment checks at random intervals. A risk assessment has been performed and documented according to Annex I.

Products are marked with CE 0875 and evaluated by:
Dekra Industrial Oy
NoBo 0875
P.O. Box 41
FIN-01621 Vantaa, Finland

Certificate issued: 24-141568

Signed for and on behalf of:
Date: 26 March 2025
Place: Leppävirta, Finland

Martti Artama, CEO

Gebwell Ltd.
Business ID: 2008956-7
Patruunapolku 5, FI-79100 Leppävirta, FINLAND
Tel. +358 20 1230 800 | info@gebwell.fi | www.gebwell.com

MADE IN FINLAND