GEBWELL

# Finnish Gebwell G-Eco® heat pumps

## R290 commercial heat pump solutions

MADE IN FINLAND

# Finnish heat pump solution for demanding properties

**Gebwell G-Eco® heat pumps are designed for heating large properties, domestic hot water production, and passive and active cooling. The solution – which is designed, manufactured, and tested in Leppävirta, Finland – features the natural refrigerant R290 and is backed by technical expertise and support for professionals.**

## R290 refrigerant-based solution for properties

G-Eco® heat pumps use the natural refrigerant R290, which meets the requirements of the increasingly stringent F-gas regulations. The GWP value of the R290 refrigerant is 0.02, while that of the R410A refrigerant is 2,088. Thus, the climate impact of R290 is more than 100,000 times smaller than that of R410A.

## Technology to support operational reliability

Our independent product development, engineering, laboratory and testing help ensure that the solution performs in demanding building environments. The inverter technology used in G-Eco heat pumps adjusts the output based on the property's actual needs.

## 20 years of experience supporting professionals

Gebwell has extensive experience in property energy solutions, and we provide continuous training to our customers and partners. We support engineers, contractors, and maintenance companies from dimensioning to commissioning and maintenance.

## Readiness for cooling

The G-Eco® solution can be integrated into the property's year-round climate control system: heating, domestic hot water, and cooling from a single system. The energy well, which serves as the heat pump's energy source, can be used for energy-efficient passive and active cooling of the property. For this, the property must have a system capable of distributing cooling.

# Table of contents


Support throughout the lifecycle – from planning to maintenance ..... 4
Professional toolkit for a successful heat pump project ..... 5
G-Eco® heat pumps ..... 6
Gebwell Smart – smart energy management for properties ..... 7
G-Eco® Core 30 heat pump ..... 8
G-Eco® Core 40 heat pump ..... 9
G-Eco® Core 80 heat pump ..... 10
G-Eco Core heat pumps – Technical specifications ..... 11
G-Eco® Pro 120 | 120 HT heat pumps ..... 12
G-Eco Pro heat pumps – Technical specifications ..... 13
G-Eco® Core 30 – Dimensions ..... 21
G-Eco® Core 40 – Dimensions ..... 23
G-Eco® Core 80 – Dimensions ..... 25
G-Eco® Pro 120 | 120 HT – Dimensions ..... 27
G-Energy buffer tanks ..... 29
G-Energy buffer tank ..... 29
G-Energy SV buffer tank ..... 30
G-Energy PW buffer tank ..... 30
G-Energy DHW buffer tank ..... 31
G-Energy Cooling buffer tank ..... 31
G-Energy Coil buffer tank ..... 32
G-Energy Custom accumulator ..... 32
Accessories for heat pumps ..... 33
Collector valve group ..... 33
Heating control group ..... 33
Change-over valve package ..... 34
Domestic hot water circulator pump set ..... 34
Domestic hot water shunt ..... 34

# Support throughout the lifecycle – from planning to maintenance

**The success of a heat pump project for a large property is determined well before installation. That's why Gebwell supports professionals in dimensioning, device selection, system commissioning, and training. After installation, Gebwell's spare parts and maintenance services support maintenance companies throughout the system's life cycle.**

## Correct dimensioning reduces risks

We help you choose the right device configuration for your project and take the heating, domestic hot water, and cooling requirements into account as early as the planning phase.

## Commissioning and training for professionals

We offer support for commissioning and training for installation personnel and maintenance companies. This helps ensure that the systems our customers order perform as intended.

## Maintenance, spare parts, and technical support

Our technical support and spare parts service are available throughout the lifecycle of your device. When support is readily available, operational reliability and risk management improve.

## Gebwell's strengths

Finnish design, independent production, 20 years of experience, and support for professionals make the G-Eco® solution a safe choice for demanding properties.

# Professional toolkit for a successful heat pump project

## Accurate dimensioning

Our experts will help you accurately determine your heating and cooling needs to minimise the technical risks of your project.

## Project-specific solution

We'll recommend optimal device configurations and provide P&I diagrams and space reservation models to support your planning.

## Clearer decisions

Our dimensioning tool helps you size the desired system, while energy and savings calculations for the configuration make it easier to compare options.

## Spare parts made easy

Our spare parts service supports system maintenance and helps minimise downtime.

## Remote monitoring with Gebwell Smart Hub

Smart Hub helps you monitor your fleet of devices in real time, make the desired adjustments, identify maintenance needs, and reduce unnecessary on-site visits.

# G-Eco® heat pumps

## A future-proof choice in line with the F-Gas Regulation

Gebwell G-Eco® heat pumps use the natural refrigerant R290 and do not contain fluorinated greenhouse gases. This solution helps properties prepare for future demands and make farsighted technology choices.

The G-Eco® product family is designed for heating, domestic hot water production, and cooling in large properties. Inverter control adjusts the power output to the building's needs, supporting energy-efficient and stable operation year round.

The high temperature range, readiness for heat recovery and Gebwell Smart Hub remote monitoring make G-Eco® a comprehensive, controlled solution for demanding properties.

**G-Eco® Core 30 heat pump**

**G-Eco® Core 40 heat pump**

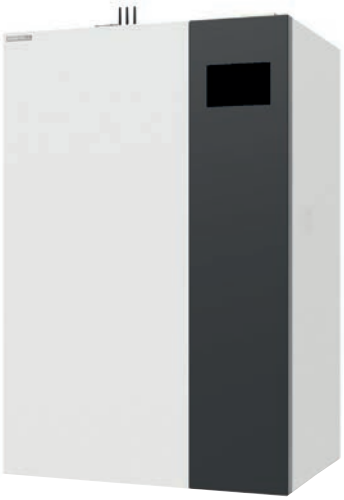

**G-Eco® Core 80 heat pump**

**G-Eco® Core Pro 120 | 120 HT heat pump**

# Gebwell Smart – smart energy management for properties

Gebwell Smart provides real-time monitoring, remote control, and proactive maintenance for the heating, cooling, and domestic hot water production of properties. The browser-based service makes the system easier to use, ensures operational reliability, and helps improve energy efficiency.

## Smart service to support operational reliability

Every Gebwell Smart heat pump is linked to the Gebwell Smart cloud service at the factory. The service collects the system's operating data, which can be used to monitor performance, optimise settings, and further develop the service. The Gebwell Smart heating system comes complete with data connections that only need to be set up before use.

A shared view facilitates collaboration between the property owner, maintenance personnel, and technical support. Any deviations are detected early, allowing them to be addressed before they cause downtime or unnecessary maintenance visits.

## Gebwell Smart Hub – real-time view 24/7

With the Gebwell Smart Hub, you can monitor the system's status anytime, anywhere. The Hub shows you key measurement data, trends, and alerts, allowing you to make desired adjustments to settings remotely.

### In Gebwell Smart Hub, you can

- Monitor system status 24/7
- Adjust general heat pump settings
- Control heating, cooling, and domestic hot water settings
- See alerts and trends in a single view
- Support proactive maintenance and reduce unnecessary visits

### Gebwell Smart is included in the price of heat pumps for two years, including

- Internet connection data fee
- Browser-based Gebwell Smart Hub service
- Technical helpline

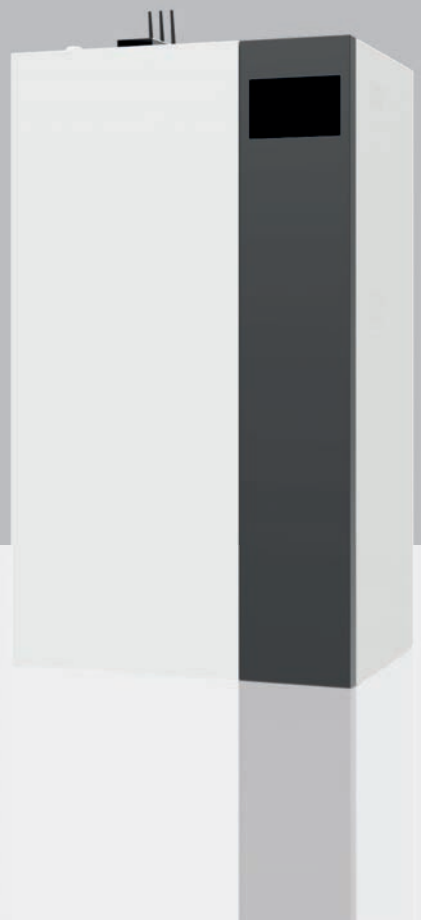

| | G-Eco Core 30 |
|---|---|
| **GTIN code** | 6430079400755 |
| **Heating output (0°/35° and 0°/55°), kW[1]** | 6.7 – 30.4 and 6.2 – 28.2 |
| **Cooling output (0°/35° and 0°/55°), kW[1]** | 5.3 – 23.2 and 4.2 – 18.7 |
| **Input power (0°/35° and 0°/55°), kW[1]** | 3.0 and 4.2 |
| **Maximum input power, kW** | 16.1 |
| **Maximum operating current, A** | 28.8 |
| **COP[2]** | 4.6 and 3.1 |
| **SCOP, cold climate (0°/35° and 0°/55°, according to EN 14825)** | 5.4 and 4.1 |
| **Refrigerant charge, kg** | 0.91 |
| **$CO_2$ equivalence,** tonnes $CO_2$ | 0.0000182 |
| **Sound level[3]** | 38.8 – 47.7 |
| **External dimensions (depth x width x height), mm** | 635 x 850 x 1,605 |
| **Weight, kg** | 350 |

*[1] Power values in accordance with EN 14511*
*[2] Bi 0/Wo 35 in accordance with standard EN 14511, at a compressor speed of 3,000 r/min*
*[3] Measured sound level in accordance with EN 12102 and EN 3741 under conditions 0/35, at the compressor's min–max speed*

# G-Eco® Core 30 heat pump

Gebwell G-Eco Core 30 is a compact and energy-efficient inverter-controlled heat pump for properties that uses the natural refrigerant R290. It has a very low climate impact, as the refrigerant has a GWP of only 0.02.

Thanks to inverter control, the heat pump's output continuously adjusts to the building's actual energy needs. Continuously variable power control improves efficiency, reduces energy consumption, and ensures smooth performance in varying operating conditions.

G-Eco Core 30 can produce high supply water temperatures, making it suitable for both new construction and renovation projects. The heat pump's wide operating range makes it possible to harness energy from various heat recovery sources.

The heat pump was designed from the ground up for the R290 refrigerant, and its carefully soundproofed design enables very quiet operation.

The intuitive touchscreen makes G-Eco Core 30 very user-friendly. Guided commissioning speeds up installation, and system operation can be monitored and controlled remotely via the Gebwell Smart Hub.

**New controller, IoT features**

**Touchscreen**

**Very quiet**

**Temperature levels**

- Maximum supply water temperature: +20... +75 °C
- Recommended temperatures in the collector: –10...+30 °C

**Refrigerant R290, charge 0.91 kg**

**Built-in brine circuit and charge pumps**

**Operating current of the protective device 3 x 32 A**

| | G-Eco Core 40 |
|---|---|
| **GTIN code** | 6430079400762 |
| **Heating output (0°/35° and 0°/55°), kW[1]** | 10.5 – 39.4 and 8.7 – 38.7 |
| **Cooling output (0°/35° and 0°/55°), kW[1]** | 8.9 – 31.4 and 6.4 – 26.3 |
| **Input power (0°/35° and 0°/55°), kW[1]** | 2.2 – 10.6 and 3.2 – 13.7 |
| **Maximum input power, kW** | 20 |
| **Maximum operating current, A** | 37 |
| **COP (0°/35° and 0°/55°, 50 hz, according to EN 14511)** | 4.6 and 3.1 |
| **SCOP (0°/35° and 0°/55°, according to EN 14825)** | 5.1 and 4.1 |
| **Refrigerant charge, kg** | 1.8 |
| **$CO_2$ equivalence,** tonnes $CO_2$ | 0.000036 |
| **Sound level[2]** | 45 – 54 |
| **External dimensions (depth x width x height), mm** | 850 x 690 x 1,850 |
| **Weight, kg** | 380 |

*[1] Power values in accordance with EN 14511*
*[2] Measured in accordance with EN 12102 and EN 3741, at 0/35 temperatures, at the compressor's min–max speeds*

# G-Eco® Core 40 heat pump

Gebwell G-Eco Core is a powerful IoT inverter heat pump that uses the eco-friendly R290 refrigerant.

R290 has a minimal impact on global warming compared to traditional hydrofluorocarbon refrigerants. The R290 refrigerant has a GWP of only 0.02 and an ODP of 0.

Gebwell G-Eco Core is capable of adjusting to the building's energy needs year round thanks to its inverter-controlled compressor. Continuously variable inverter control ensures that the heat output matches the network's requirements exactly without over or underheating, minimising the property's heating bills.

G-Eco Core is connected to the manufacturer's Gebwell Smart cloud service, allowing the heat pump to be controlled remotely through the browser-based Hub.

**New controller, IoT features**

**Temperature levels**

- Maximum supply water temperature: +75 °C
- Recommended temperatures in the collector: –10...+20 °C (+30 °C*)

**Refrigerant R290, charge 1.8 kg**

**Built-in source brine circuit and charge pumps**

**Operating current of the protective device 3 x 40 A**

** temporary exceedance allowed*

| | G-Eco Core 80 |
|---|---|
| **GTIN code** | 6430079400786 |
| **Heating output (0°/35° and 0°/55°), kW[1]** | 20.5 – 84.5 and 26.1 – 80.2 |
| **Cooling output (0°/35° and 0°/55°), kW[1]** | 19.0 – 64.6 and 16.9 – 54.1 |
| **Input power (0°/35° and 0°/55°), kW[1]** | 8.0 and 11.7 |
| **Maximum input power, kW** | 38.7 |
| **Maximum operating current, A** | 69.0 |
| **COP[2]** | 4.9 and 3.1 |
| **SCOP (0°/35° and 0°/55°, according to EN 14825)** | 5.6 and 4.2 |
| **Refrigerant charge, kg** | 3.3 |
| **$CO_2$ equivalence,** tonnes $CO_2$ | 0.000066 |
| **Sound level[2]** | 43 – 52 |
| **External dimensions (depth x width x height), mm** | 790 x 1,060 x 1,750 |
| **Weight, kg** | 650 |

*[1] Power values in accordance with EN 14511*
*[2] Measured in accordance with EN 12102 and EN 3741 under conditions 0/35 at the compressor's min–max speeds*

# G-Eco® Core 80 heat pump

Gebwell G-Eco Core 80 is an inverter-controlled heat pump that uses the natural R290 refrigerant. The GWP of this refrigerant is only 0.02, so its climate impact is 100,000 times smaller than that of R410A.

G-Eco Core 80 delivers a supply water temperature of up to +75 °C, making it suitable for applications that require higher temperatures, such as radiator heating systems or domestic hot water production. Thanks to the wide operating temperature range of the collector, –10…+30 °C, it is also suitable for applications such as heat recovery systems.

The G-Eco heat pump is specifically designed for the R290 refrigerant. Thanks to its carefully soundproofed design, the operation of G-Eco Core 80 is very quiet, which is particularly important in buildings where the technical room is located near living spaces or recreational areas.

The G-Core Core 80 heat pump features a clear and user-friendly touchscreen with a unique guided commissioning feature.

**New controller, IoT features**

**Touchscreen**

**Very quiet**

**Temperature levels**

- Maximum supply water temperature: 0/+75 °C
- Recommended temperatures in the collector: –10...+30 °C

**Refrigerant R290, charge 3.3 kg**

**Built-in brine circuit and charge pumps**

**Operating current of the protective device 3 x 80 A**

** temporary exceedance allowed*

# G-Eco Core heat pumps – Technical specifications

| | | G-Eco Core 30 | G-Eco Core 40 | G-Eco Core 80 |
|---|---|---|---|---|
| **GTIN code** | | 6430079400755 | 6430079400762 | 6430079400786 |
| **Heating output (0°/35°)[1]** | kW | 6.7 – 30.4 | 10.5 – 39.4 | 20.5 – 84.5 |
| **Heating output (0°/55°)[1]** | | 6.2 – 28.2 | 8.7 – 38.7 | 26.1 – 80.2 |
| **Cooling output (0°/35°)[1]** | kW | 5.3 – 23.2 | 8.9 – 31.4 | 19.0 – 64.6 |
| **Cooling output (0°/55°)[1]** | kW | 4.2 – 18.7 | 6.4 – 26.3 | 16.9 – 54.1 |
| **Input power (0°/35°)[1]** | kW | 3.0 | 2.2 – 10.6 | 8.0 |
| **Input power (0°/55°)[1]** | kW | 4.2 | 3.2 – 13.7 | 11.7 |
| **Maximum input power** | kW | 16.1 | 20 | 38.7 |
| **Maximum operating current** | A | 28.8 | 37 | 69.0 |
| **COP (0°/35°)** | | 4.62[2] | 4.6 | 4.9[2] |
| **COP (0°/55°)** | | 3.12[2] | 3.1 | 3.1[2] |
| **SCOP (0°/35°, according to EN 14825)** | | 5.4 | 5.1 | 5.6 |
| **SCOP (0°/55°, according to EN 14825)** | | 4.1 | 4.1 | 4.2 |
| **The system's energy efficiency class, average climate, underfloor heating** | | A+++ | A+++ | - |
| **Charge circuit flow (0/35, min–max, delta T 5, water)** | l/s | 0.32 – 1.46[2] | 0.5 – 1.9 | 1.1 – 4.1 |
| **Collector flow (0/35, min–max, delta T 3, ethanol-water 28 %)** | l/s | 0.43 – 1.85[2] | 0.7 – 2.4 | 1.6 – 5.5 |
| **Maximum permitted external pressure loss at rated flow** | kPa | 152 (2.43 l/s) | 100 (2.5 l/s) | 152 (2.43 l/s) |
| **Maximum operating pressure of the heating system / brine circuit (network pressure must be considered)** | bar | 10 / 10 | 10 / 10 | 10 / 10 |
| **Heating water maximum output temperature** | °C | +20... +75[3] | +75 | +75 |
| **Operating temperature, collector** | °C | –10...+25/+30[3] | –10...+20 (+30)[4] | -10...+30 |
| **Number and type of compressors** | | 1, Scroll (frequency controlled) | 1, Scroll (frequency controlled) | 1, Scroll (frequency controlled) |
| **Built-in charge pump** | | Yes (frequency converter) | Yes (frequency converter) | Yes (frequency converter) |
| **Built-in brine circuit pump** | | Yes (frequency converter) | Yes (frequency converter) | Yes (frequency converter) |
| **Electrical connection** | | 400 VAC, 3L+N+PE, 50 Hz | 400 VAC, 3L+N+PE, 50 Hz | 400 VAC, 3L+N+PE, 50 Hz |
| **Operating current of the protective device** | A | 3 x 32 | 3 x 40 | 3 x 80 |
| **Contains fluorinated greenhouse gases** | | No | No | No |
| **Hermetically sealed** | | Yes | Yes | Yes |
| **Refrigerant** | | R290 | R290 | R290 |
| **GWP (Global Warming Potential)** | | 0.02 | 0.02 | 0.02 |
| **Refrigerant charge** | kg | 0.91 | 1.8 | 3.3 |
| **$CO_2$ equivalence** | tonnes $CO_2$ | 0.0000182 | 0.000036 | 0.000066 |
| **Sound level[5]** | dB (A) | 38.8 – 47.7 | 45 – 54 | 43 – 52 |
| **External dimensions (length x width x height)** | mm | 635 x 850 x 1,605 | 850 x 690 x 1,850 | 790 x 1,060 x 1,750 |
| **Weight** | kg | 350 | 380 | 650 |
| **Heat supply circuit connections** | | G2 1/2" it | G1 1/2" it | G2" it |
| **Brine circuit connections** | | G2 1/2" it | G1 1/2" it | G2 1/2" it |
| **Ventilation connection** | mm | 125 | 125 | 125 |

*[1] Power values in accordance with EN 14511.*
*[2] B0/W35 in accordance with standard EN 14511, at a compressor speed of 3,000 r/min*
*[3] The temperature difference between the liquid entering the collector and exiting the condenser should be at least 15 K. The heat pump ensures that operating limits are maintained with internal automation.*
*[4] Temporary exceedance allowed*
*[5] Measured in accordance with EN 12102 and EN 3741, at 0/35 temperatures, at the compressor's min–max speeds*

| | G-Eco Pro 120 | G-Eco Pro 120 HT |
|---|---|---|
| **GTIN code** | 6430079400816 | 6430079400823 |
| **Heating output (0°/35° and 0°/55°), kW[1]** | 56.5 – 118.5 and 48.0 – 103.5 | 56.5 – 118.5 and 48.0 – 103.5 |
| **Cooling output (0°/35° and 0°/55°), kW[1]** | 44.6 – 89.2 and 34.4 – 70.0 | 44.6 – 89.2 and 34.4 – 70.0 |
| **Maximum input power, kW[1]** | 40.1 | 54.5 |
| **Maximum operating current, A** | 71.5 | 97.1 |
| **COP (0°/35° and 0°/55°)[2]** | 4.7 and 3.3 | 4.7 and 3.3 |
| **SCOP cold climate (0°/35° and 0°/55°, according to EN 14825)** | 4.83 and 4.0 | 4.83 and 4.0 |
| **SCOP average climate (0°/35° and 0°/55° , according to EN 14825)** | 4.75 and 3.9 | 4.75 and 3.9 |
| **Refrigerant charge, kg** | 4.7 | 4.9 |
| **$CO_2$ equivalence,** tonnes $CO_2$ | 0.000094 | 0.000098 |
| **Sound level (0°/35° and 0°/55°)[2]** | 54 – 59 | 54 – 59 |
| **External dimensions (depth x width x height), mm** | 1,250 x 750 x 1,870[3] | |
| **Weight, kg** | 800 | 800 |

*1 Power values in accordance with EN 14511 at the compressor's min...max rotational speed*
*2 B0/W35 in accordance with standard EN 14511, at a compressor speed of 1,450 r/min*
*3 Dimensions with leveling feet fitted, from the base of the levelling foot to the top of the pipe connections*

# G-Eco® Pro 120 | 120 HT heat pumps

Gebwell G-Eco Pro is an inverter-controlled heat pump for buildings that uses the eco-friendly and natural R290 refrigerant. The R290 refrigerant has a GWP value of only 0.02 and an ODP of 0.

The inverter-controlled G-Eco Pro is capable of adjusting to the building's energy needs year round. The compressor's continuously variable inverter control ensures the unit's output matches the network's requirements exactly without over or underheating, minimising your heating bills.

When connected to the manufacturer's Gebwell Smart cloud service, the G-Eco Pro heat pump can be controlled remotely through the browser-based Hub. Your maintenance company can view the status of the heating system and adjust heating settings remotely through the Hub.

The G-Eco Pro heat pump is designed specifically for the R290 refrigerant, and its compressor unit is completely isolated.

With its higher supply water temperature, the G-Eco Pro HT model is ideal for domestic hot water production; and with the wider operating range of its collector, it is now even better suited for heat recovery solutions than before.

**New controller, IoT features**

**Temperature levels**

- Maximum supply water temperature: 0/+60 °C | HT: 0/+75 °C
- Recommended temperatures in the collector: –10...+20 °C (+30 °C*) | HT: –10…+30 °C

**Refrigerant: R290, charge: 4.7 kg | HT: 4.9 kg**

**Operating current of the protective device: 3 x 80 A | HT: 3 x 100 A**

** temporary exceedance allowed*

# G-Eco Pro heat pumps – Technical specifications

| | | G-Eco Pro 120 | G-Eco Pro 120 HT |
|---|---|---|---|
| **GTIN code** | | 6430079400816 | 6430079400823 |
| **Power values (in accordance with EN 14511)** | | | |
| **Heating output min–max (0°/35° and 0°/55°)[1]** | kW | 56.5 – 118.5 and 48.0 – 103.5 | 56.5 – 118.5 and 48.0 – 103.5 |
| **Nominal heating capacity (0°/35° and 0°/55°)[2]** | kW | 99.8 and 87.6 | 99.8 and 87.6 |
| **Cooling output min–max (0°/35° and 0°/55°)[1]** | kW | 44.6 – 89.2 and 34.4 – 70.0 | 44.6 – 89.2 and 34.4 – 70.0 |
| **Nominal cooling capacity (0°/35° and 0°/55°)[2]** | kW | 76.7 and 62.4 | 76.7 and 62.4 |
| **Maximum input power (0°/35° and 0°/55°)[1]** | kW | 40.1 | 54.5 |
| **Nominal input power (0°/35° and 0°/55°)[2]** | kW | 21.4 and 26.4 | 21.4 and 26.4 |
| **Maximum operating current** | A | 71.5 | 97.1 |
| **COP (0°/35° and 0°/55°, according to EN 14511)[2]** | | 4.7 and 3.3 | 4.7 and 3.3 |
| **SCOP cold climate (0°/35° and 0°/55°, according to EN 14825)** | | 4.83 and 4.0 | 4.83 and 4.0 |
| **SCOP average climate (0°/35° and 0°/55°, according to EN 14825)** | | 4.75 and 3.9 | 4.75 and 3.9 |
| **Minimum ventilation rate in safety mode (Qmin)** | m³/h | 157 | 164 |
| **Ventilation rate in normal mode[3]** | m³/h | 50 | 50 |
| **Minimum volume of the installation site** | m³ | 17.5 | 17.5 |
| **Recommended/maximum temperature of the installation site** | °C | +15...25/+30 | +15...25/+30 |
| **Heating system / collector circuit maximum operating pressure (network pressure must be considered)** | bar | 10 / 10 | 10 / 10 |
| **Heating water maximum output temperature** | °C | +60 | +75 |
| **Operating temperature, collector** | °C | –10... +20 (+30)[4] | –10... +30 |
| **Compressor** | | 1 unit, piston (frequency controlled) | |
| **External circulator pumps** | | Yes (frequency converter) | |
| **Electrical connection** | | 400 VAC, 3L+N+PE, 50 Hz | |
| **Operating current of the protective device** | A | 3 x 80 | 3 x 100 |
| **Charge circuit flow rate min–max (0/35, delta T 5, water)** | l/s | 2.5 – 5.8 | 2.6 – 6.1 |
| **Charge circuit rated flow[2]** | l/s | 4.8 | 4.8 |
| **Maximum permissible external pressure loss in the charge circuit at rated flow[5]** | kPa | 92 (4.8 l/s) | 92 (4.8 l/s) |
| **Collector flow (0/35, min–max, delta T 3, ethanol-water 28 %)** | l/s | 3.1 – 7.2 | 3.1 – 7.1 |
| **Collector rated flow[2]** | l/s | 6.3 | 6.3 |
| **Maximum permissible external pressure loss in the collector circuit at rated flow[5]** | kPa | 210 (6.3 l/s) | 210 (6.3 l/s) |
| **Semi-hermetically sealed** | | Yes | Yes |
| **Refrigerant** | | R290 | R290 |
| **GWP (Global Warming Potential)** | | 0.02 | 0.02 |
| **Refrigerant charge** | kg | 4.7 | 4.9 |
| **$CO_2$ equivalence** | tonnes $_{CO}$2e | 0.000094 | 0.000098 |
| **Sound Level (0/35 and 0/55)[2]** | dB (A) | 54 and 59 | 54 and 59 |
| **Sound level min–max[6]** | dB (A) | 54 – 60 | 54 – 60 |
| **Connections** | | | |
| **Heating circuit** | mm | G2 1/2" it | G2 1/2" it |
| **Collector** | mm | G2 1/2" it | G2 1/2" it |
| **Ventilation** | mm | 125 | 125 |
| **Venting discharge** | mm | Cu 35 | Cu 35 |
| **External dimensions** | | | |
| **Depth** | mm | 1,250 | 1,250 |
| **Width** | mm | 750 | 750 |
| **Height[7]** | mm | 1,870 | 1,870 |
| **Weight** | kg | 800 | 800 |

*[1] Power values in accordance with EN 14511 at the compressor's min...max rotational speed*
*[2] B0/W35 in accordance with EN 14511, at a compressor speed of 1,450 r/min.*
*[3] Normal operating air flow measured with the control damper in the factory setting (3), cold module vacuum 10 Pa*
*[4] Momentary exceedance allowed*
*[5] Gebwell brine pump L-50/D MDG and Gebwell charge pump L-50A/4 MDG*
*[6] Measured sound level in accordance with EN 12102 and EN 3741 under conditions 0/35 at the compressor's min...max speed*
*[7] Dimensions with levelling feet fitted, from the base of the levelling foot to the top of the pipe connections*

## G-Eco Core 40 – Performance value graphs

The following presents the performance of the G-Eco Core 40 heat pump at various operating points. The graphs show information such as the heat pump's COP value at different brine temperatures. In the power and COP graphs, the vertical axis represents the power/COP values, and the horizontal axis shows the temperature of the output water. The collector and charge circuit flow graphs show the flow rate on the vertical axis and the temperatures of the output water on the horizontal axis. All graphs presented below are based on maximum output conditions, except for the COP graph, which is shown at the heat pump's optimal operating point.

### Heating output [kW], 110 Hz

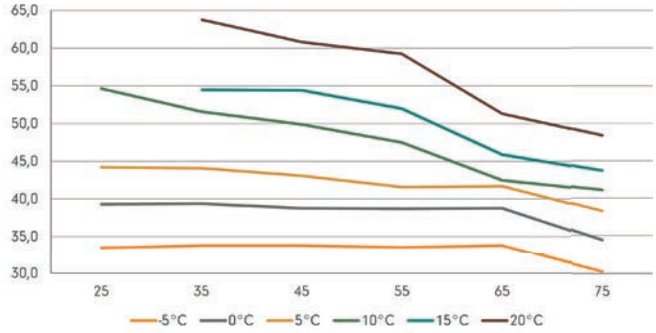


### Cooling capacity [kW], 110 Hz

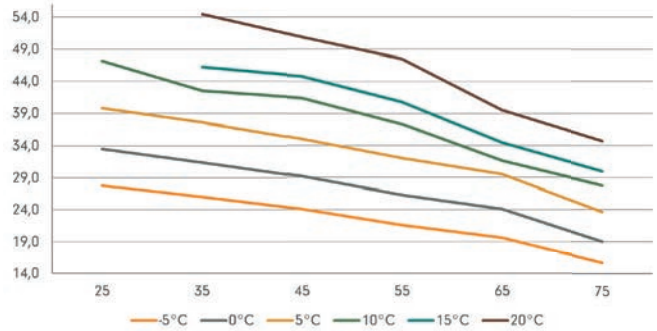


### Supplied power [kW], 110 Hz

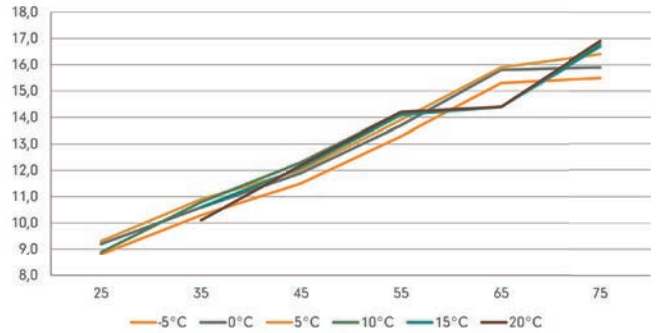


### COP, 70 Hz

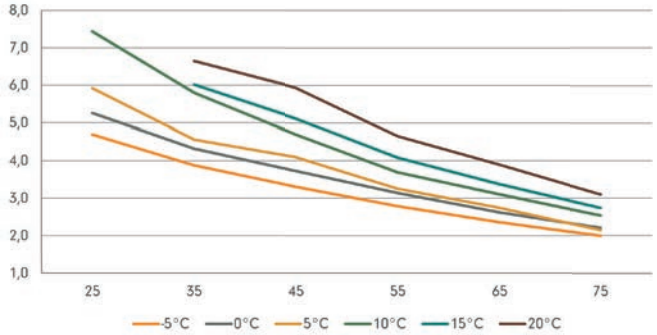


### Max external pressure loss, collector [kPa – l/s]

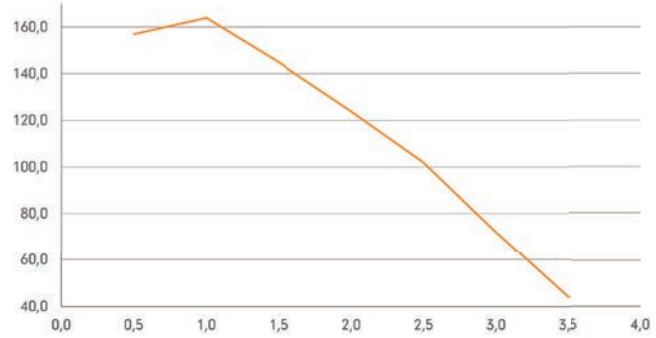


### Max external pressure loss, charge circuit [kPa – l/s]

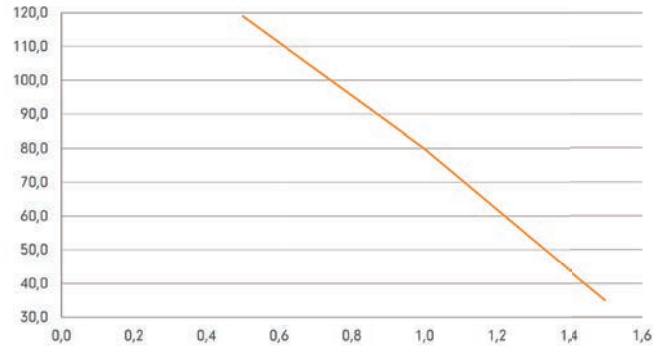


### Collector flow rate dT3 [l/s]

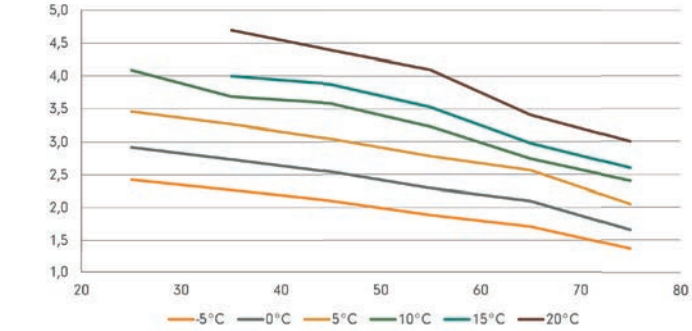


### Charge circuit flow rate dT8 [l/s]

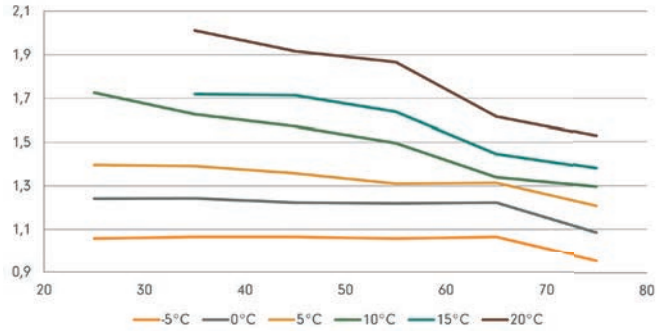

## G-Eco Core 80 – Performance graphs

The following presents the performance of the G-Eco Core 80 heat pump at various operating points. The graphs show information on the heat pump's COP value at different brine temperatures. In the power and COP graphs, the vertical axis represents the power/COP values, and the horizontal axis shows the temperature of the output water. The collector and charge circuit flow graphs show the flow rate on the vertical axis and the temperatures of the output water on the horizontal axis. All graphs presented below are based on maximum output conditions, except for the COP graph, which is shown at the heat pump's optimal operating point.

### Heating output [kW], 108 Hz

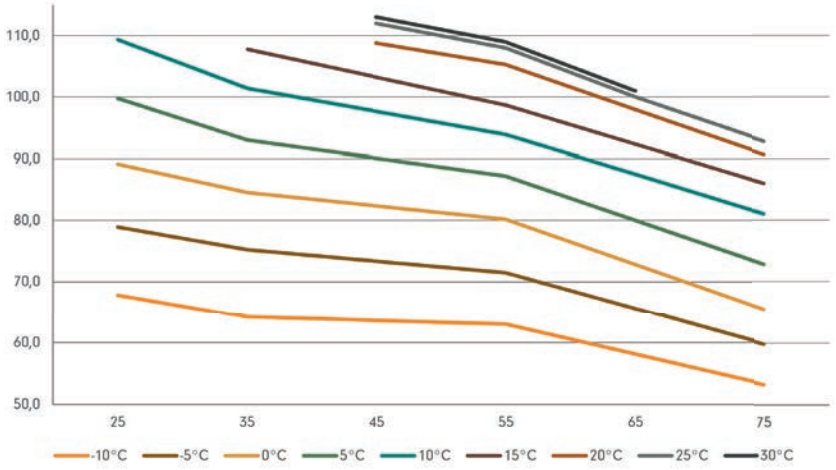


### Cooling capacity [kW], 108 Hz

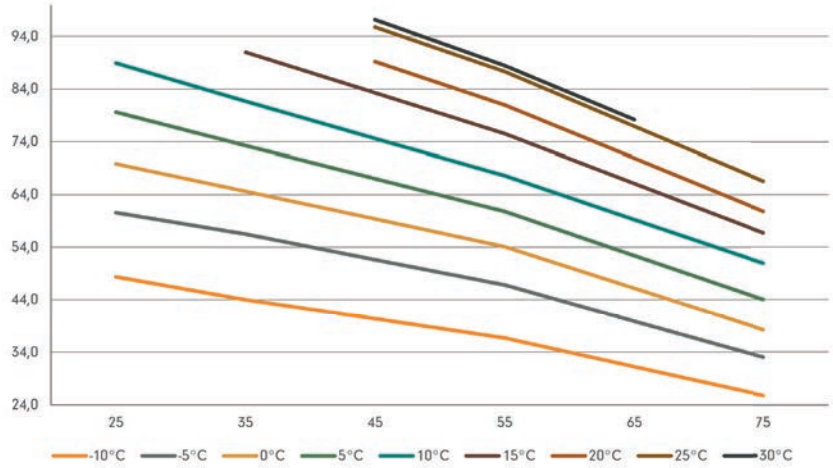


### COP, 65 Hz

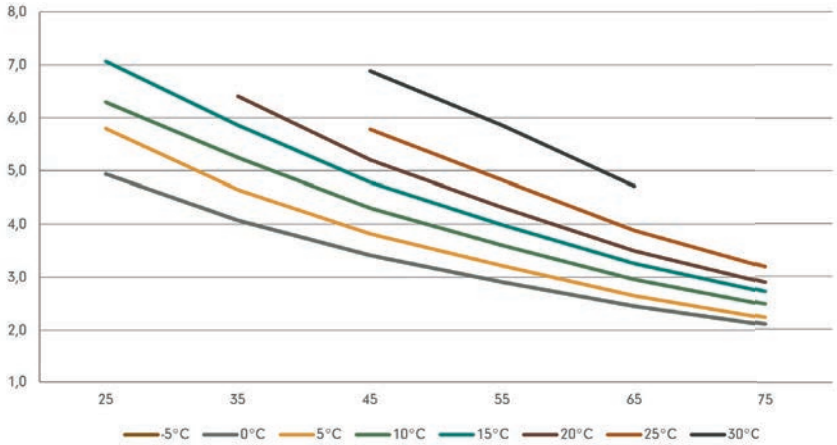

## G-Eco Core 80 – Performance graphs

### Collector

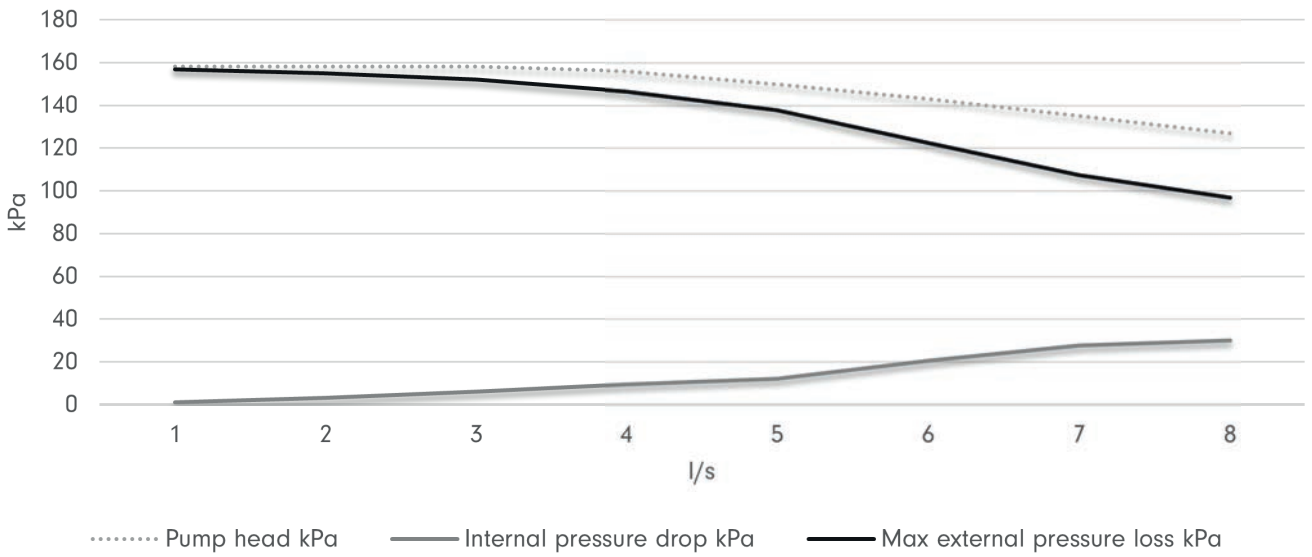


### Charge circuit

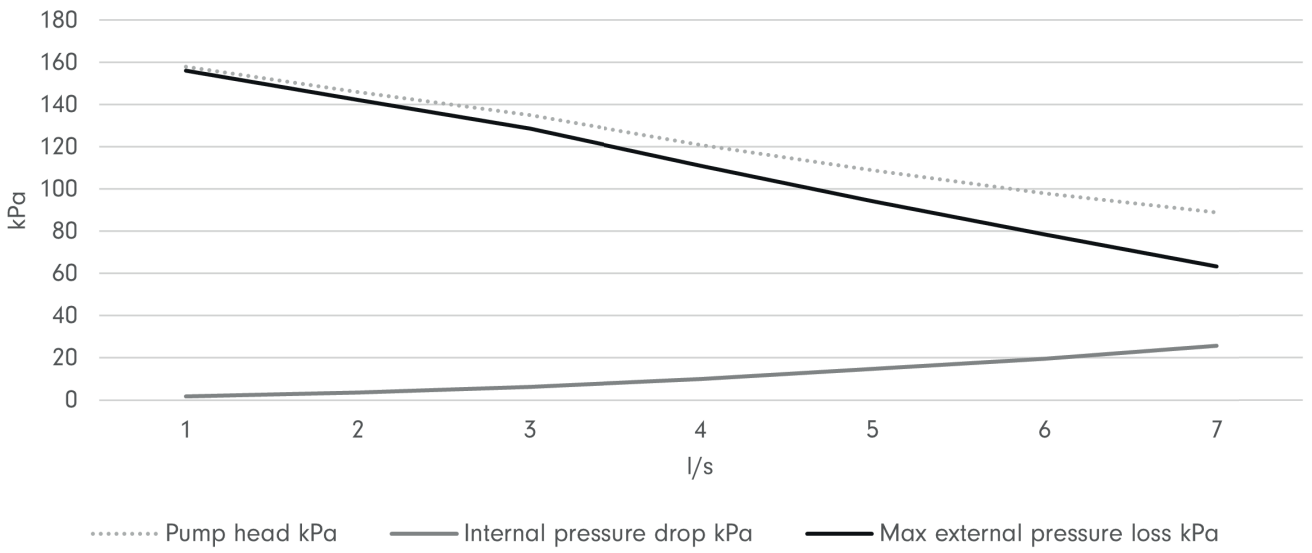


### Collector flow rate dT3 [l/s]

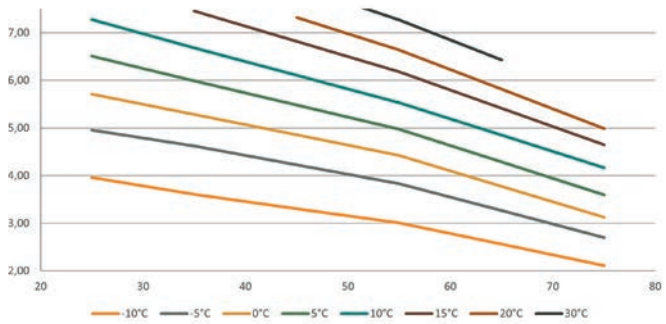


### Charge circuit flow rate dT8 [l/s]

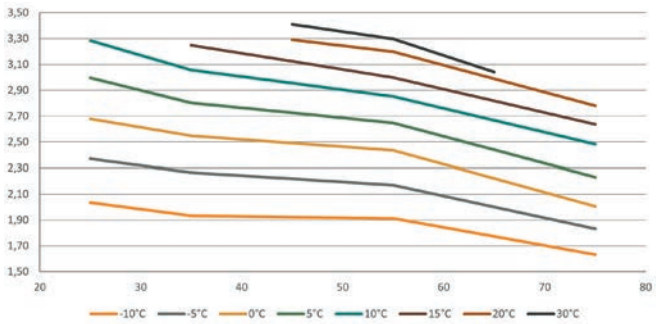

## G-Eco Pro 120 – Performance graphs

The following presents the performance of the G-Eco Pro 120 heat pump at various operating points. The graphs show information such as the heat pump's COP value at different brine temperatures. In the power and COP graphs, the vertical axis represents the power/COP values, and the horizontal axis shows the temperature of the output water. The collector and charge circuit flow graphs show the flow rate on the vertical axis and the temperatures of the output water on the horizontal axis. All graphs presented below are based on maximum output conditions, except for the COP graph, which is shown at the heat pump's optimal operating point.

### Heating output [kW], 70 Hz

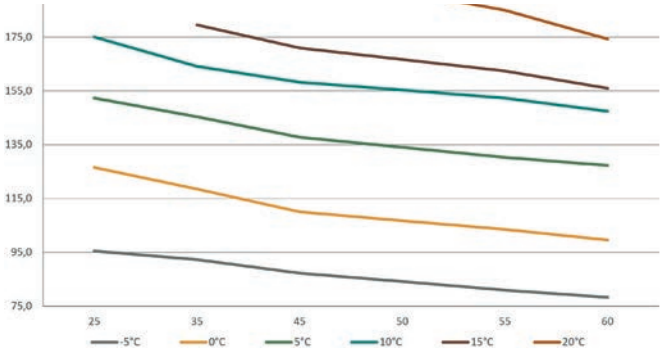


### Cooling capacity [kW], 70 Hz

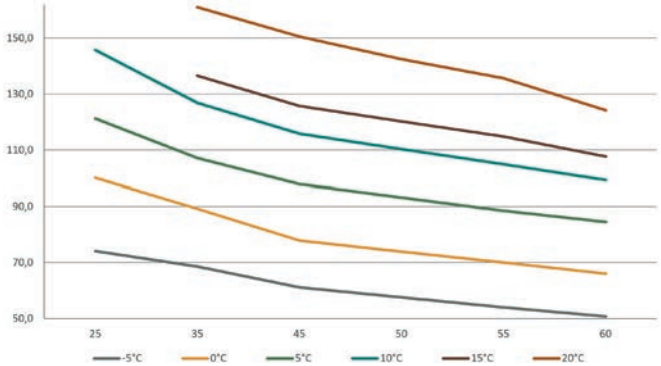


### Supplied power [kW], 70 Hz

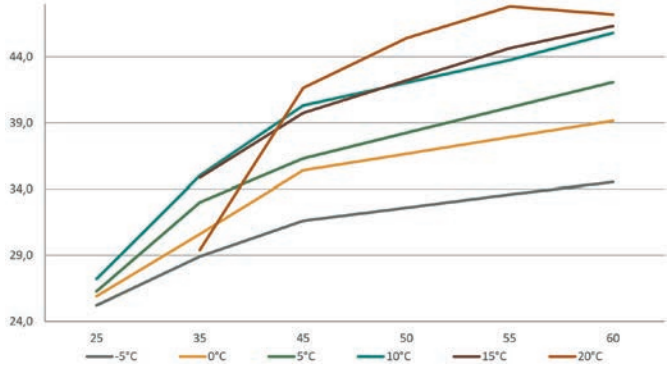


### COP, 50 Hz

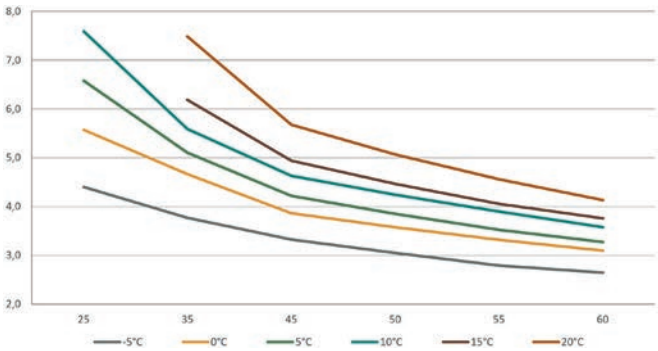


### Collector flow rate dT3 [l/s]

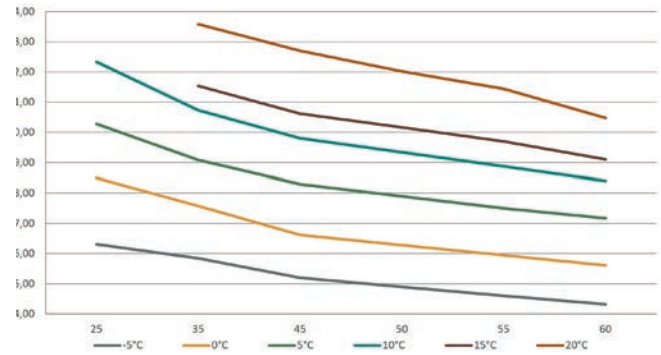


### Charge circuit flow rate dT8 [l/s]

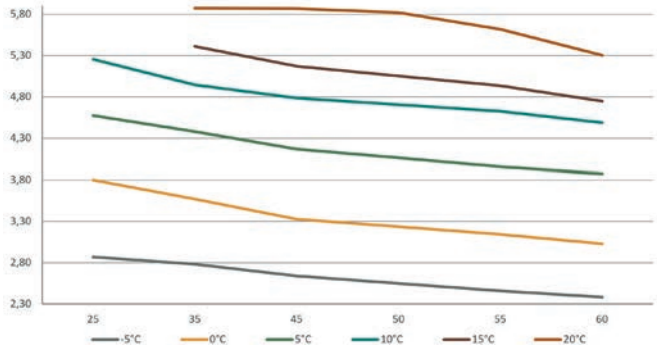

## G-Eco Pro 120 – Performance graphs

### Max external pressure loss, collector [kPa – l/s]

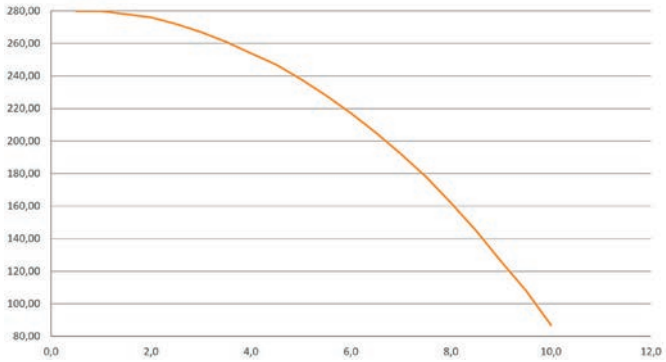


### Max external pressure loss, charge circuit [kPa – l/s]

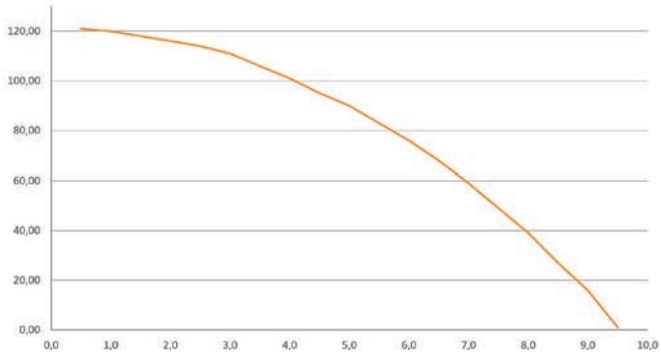


### Internal evaporator pressure drop [kPa - l/s]

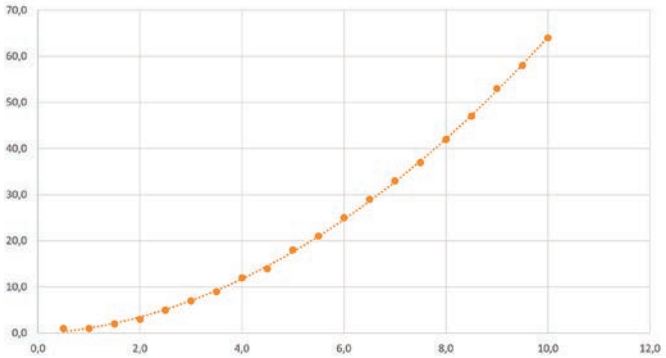


### Internal condenser pressure drop [kPa - l/s]

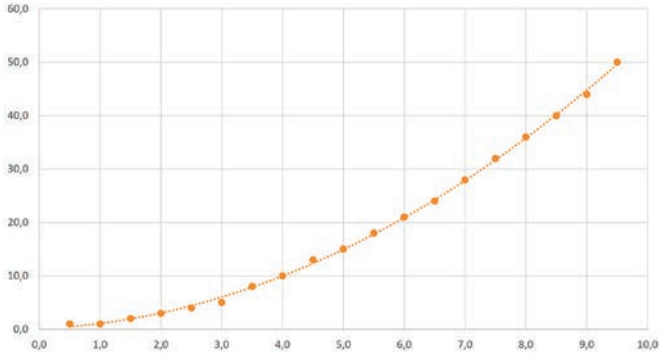

## G-Eco Pro 120 HT – Performance graphs

The following presents the performance of the G-Eco Pro 120 HT heat pump at various operating points. The graphs show information such as the heat pump's COP value at different brine temperatures. In the power and COP graphs, the vertical axis represents the power/COP values, and the horizontal axis shows the temperature of the output water. The collector and charge circuit flow graphs show the flow rate on the vertical axis and the temperatures of the output water on the horizontal axis. All of the graphs shown below are based on maximum power conditions, with the exception of the COP graph, which is shown at the heat pump's optimal operating point.

### Heating output [kW], 70 Hz

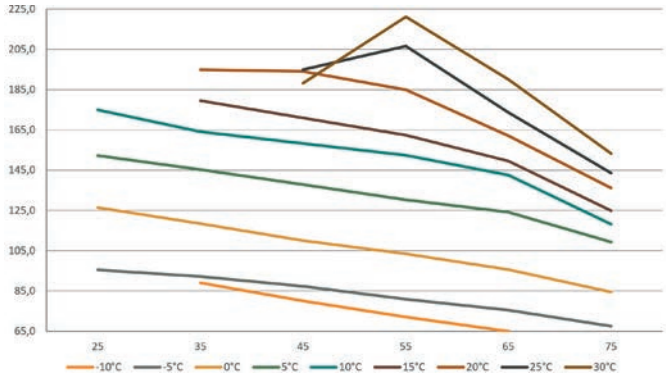


### Cooling capacity [kW], 70 Hz

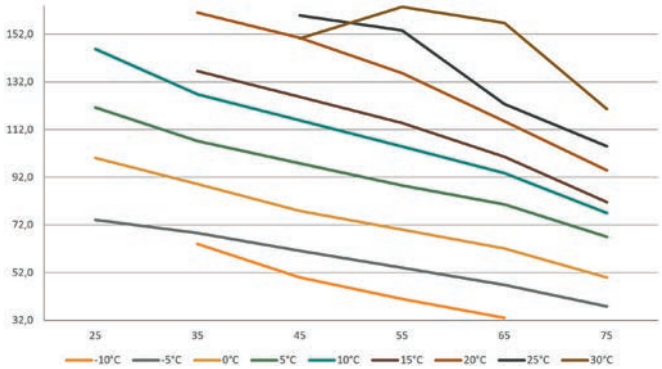


### COP, 50 Hz

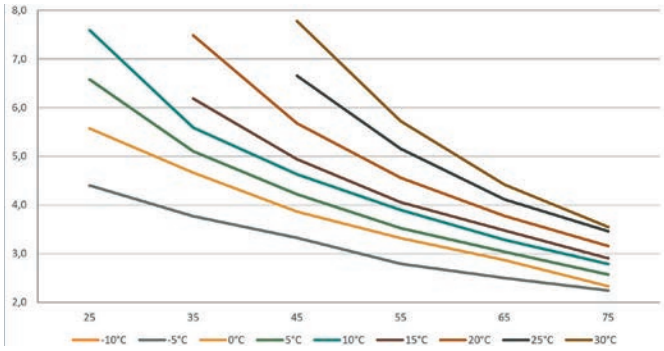


### Collector flow rate dT3 [l/s]

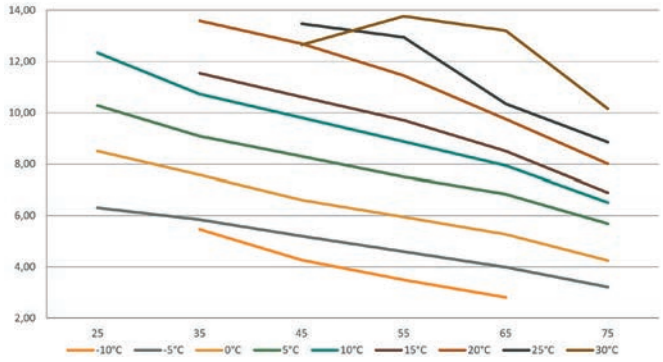


### Charge circuit flow rate dT8 [l/s]

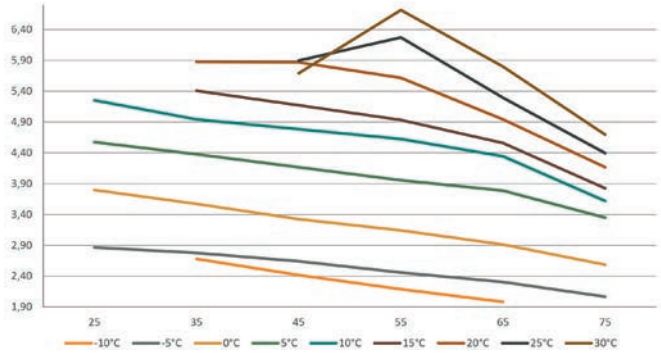

## G-Eco Pro 120 HT – Performance graphs

### Max external pressure loss, collector [kPa – l/s]

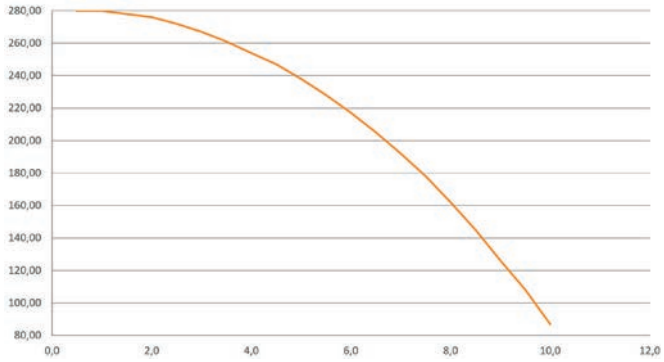


### Max external pressure loss, charge circuit [kPa – l/s]

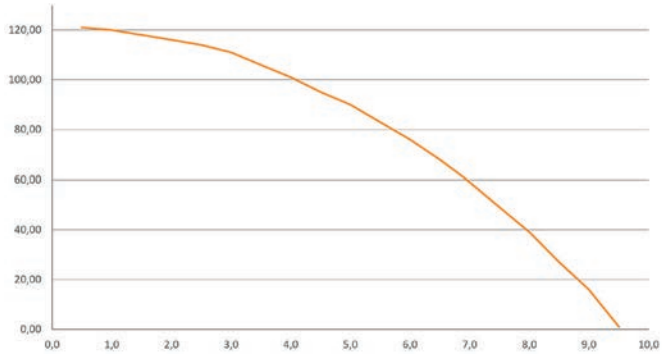


### Internal evaporator pressure drop [kPa - l/s]

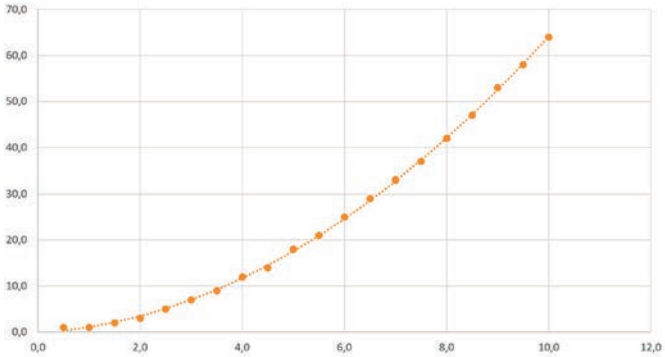


### Internal condenser pressure drop [kPa - l/s]

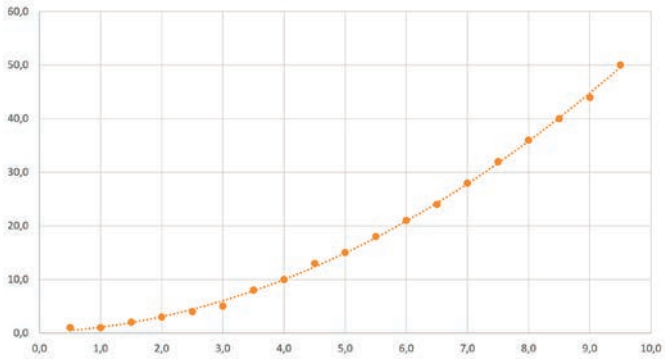

# G-Eco® Core 30 – Dimensions

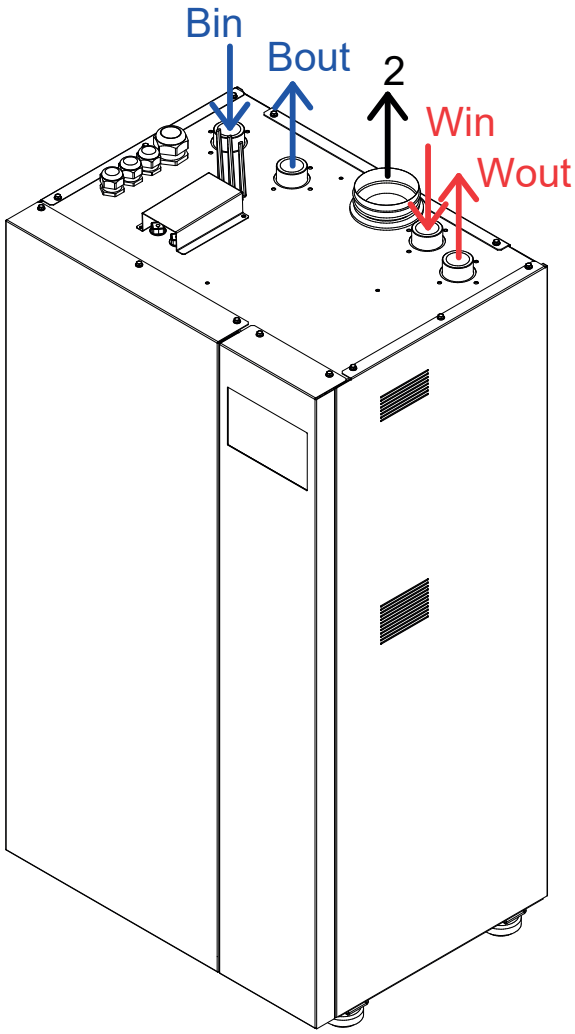


| | Dimensions |
|---|---|
| D | 635 mm |
| W | 850 mm |
| H | 1,605 mm |

| | Connection | Size |
|---|---|---|
| Bin | Collector return/in | G1 1/2" it |
| Bout | Collector supply/out | G1 1/2" it |
| Win | Heat return/in | G1 1/2" it |
| Wout | Heat supply/out | G1 1/2" it |
| 2 | Ventilation | 125 mm |

## G-Eco Core 30 – Installation dimensions

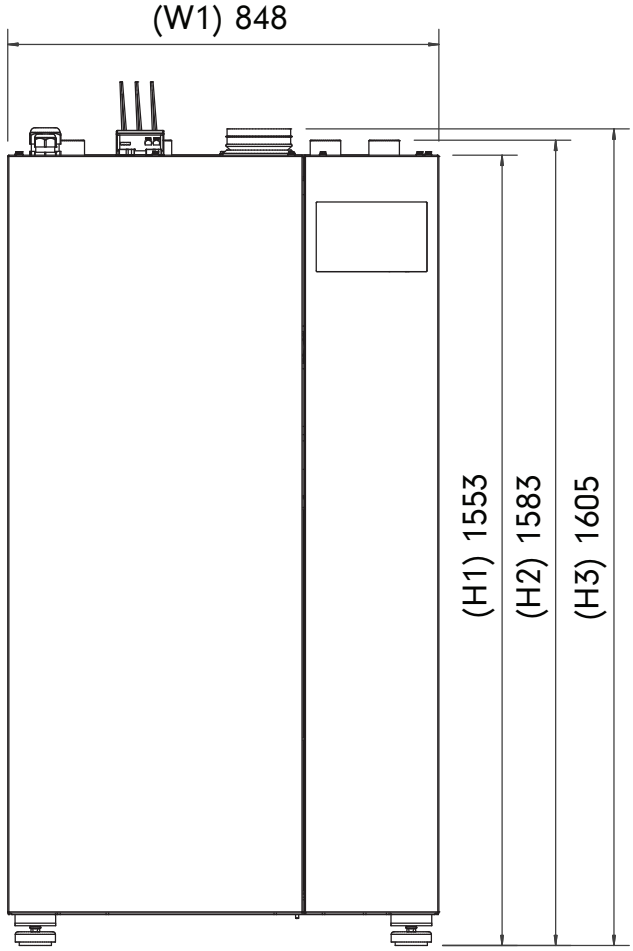


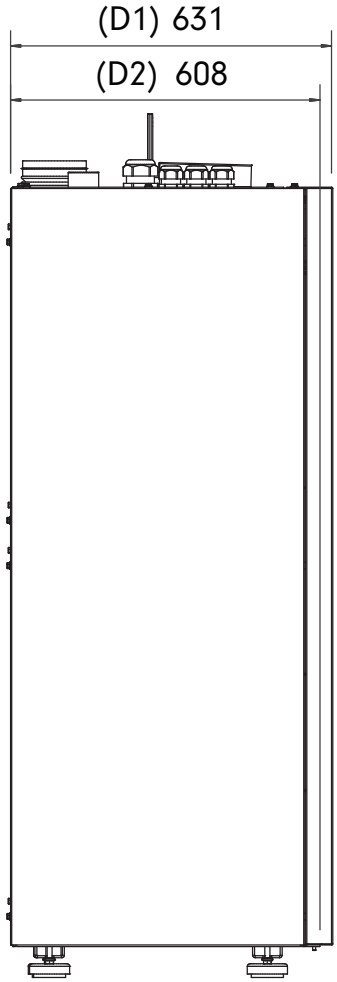


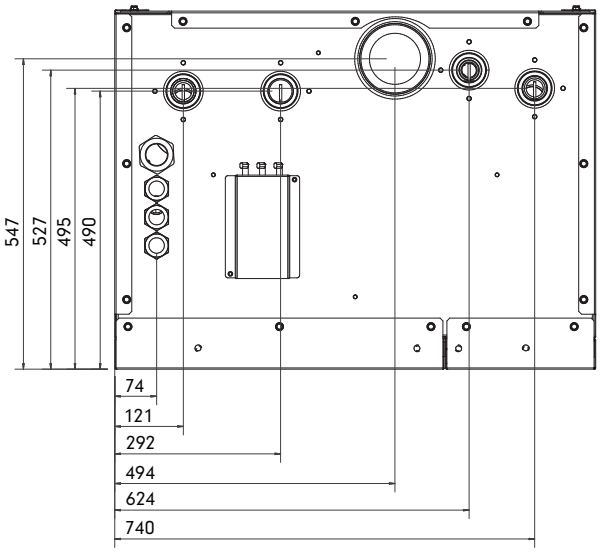


**Service area required**

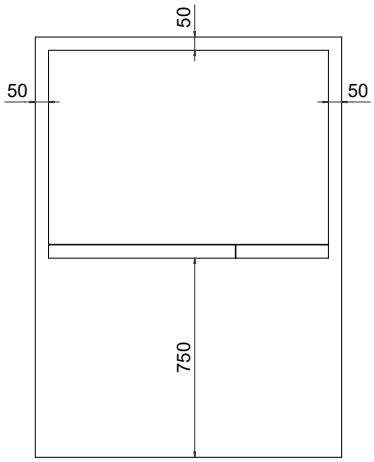

# G-Eco® Core 40 – Dimensions

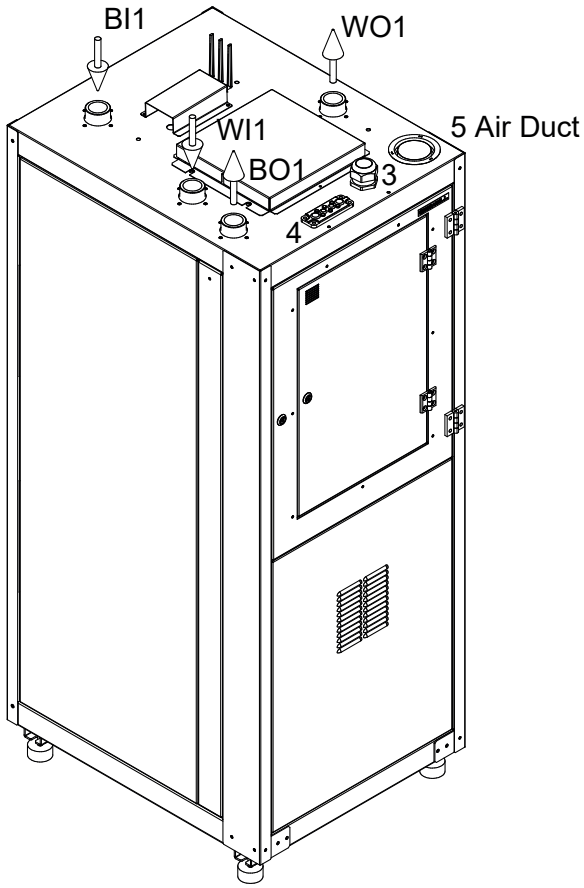


| | Dimensions |
|---|---|
| D | 850 mm |
| W | 690 mm |
| H | 1,850 mm |

| | Connection | Size |
|---|---|---|
| BO1 | Collector supply/out | G1 1/2" it |
| BI1 | Collector return/in | G1 1/2" it |
| WO1 | Heat supply/out | G1 1/2" it |
| WI1 | Heat return/in | G1 1/2" it |
| 3 | Lead-through, power supply | - |
| 4 | Multiple flange lead-through – sensors, control and data transfer cables | - |
| 5 | Ventilation | 125 mm |

## G-Eco Core 40 – Installation dimensions

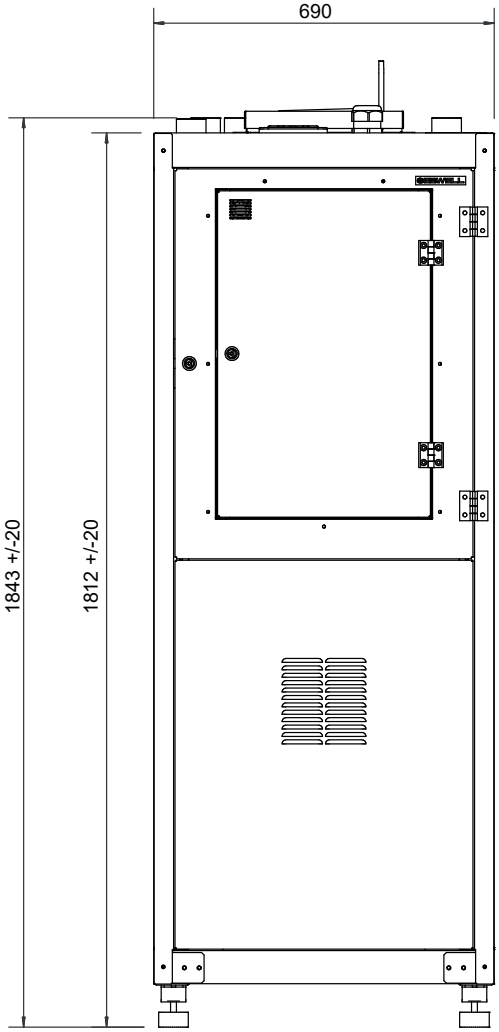


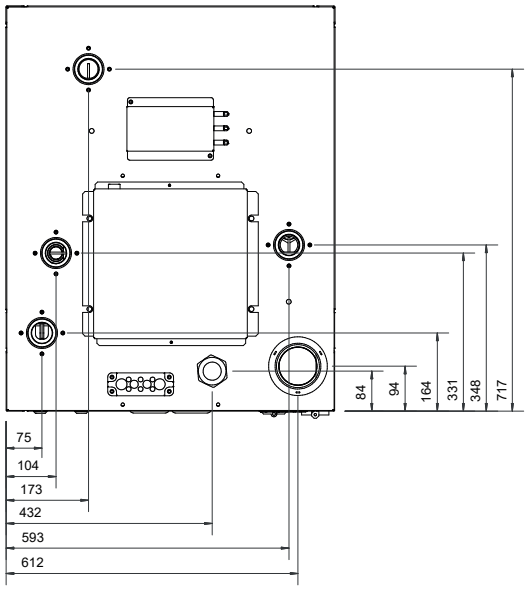


## Service area required

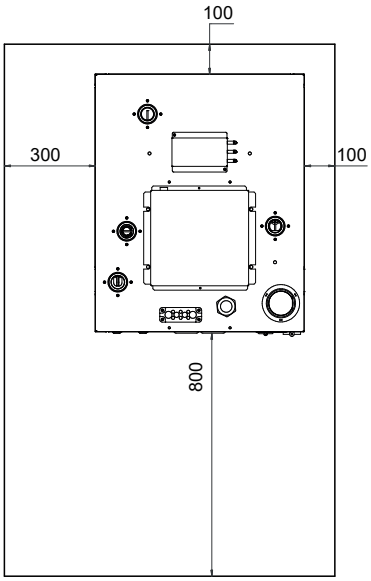


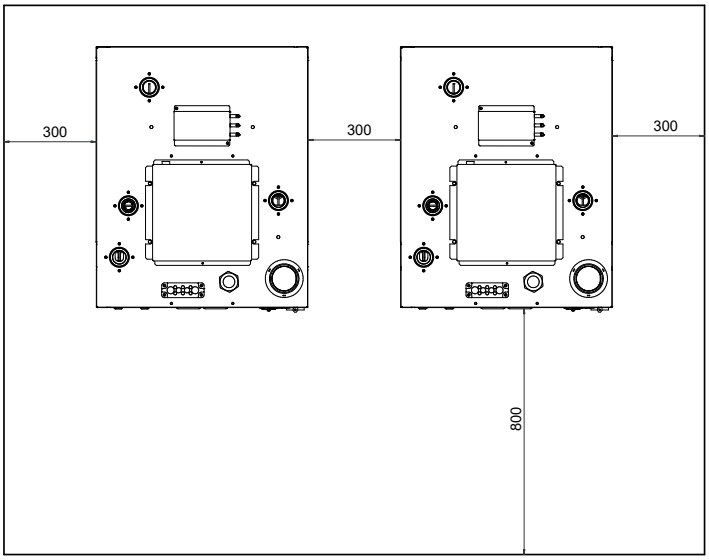

# G-Eco® Core 80 – Dimensions

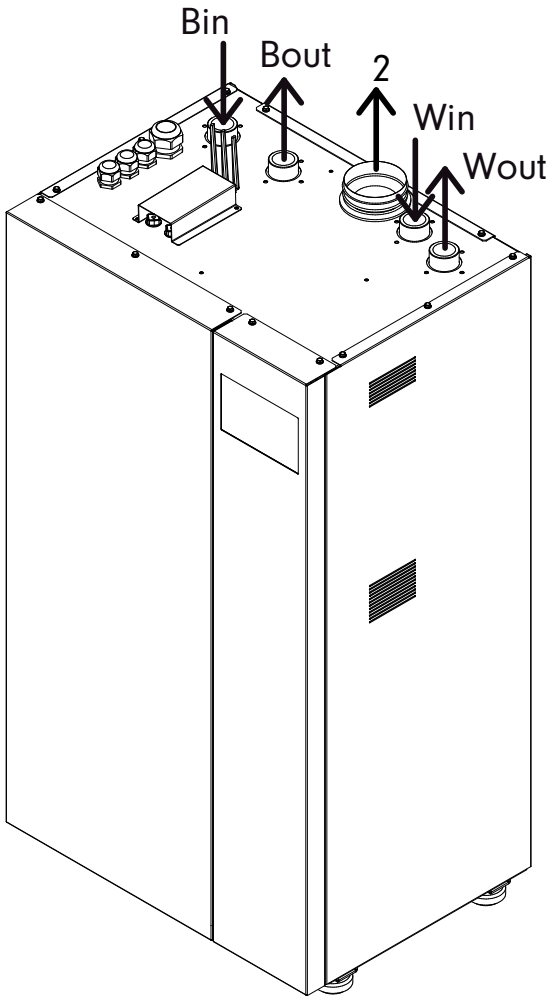


| | Dimensions |
|---|---|
| D | 790 mm |
| W | 1,060 mm |
| H | 1,750 mm |

| | Connection | Size |
|---|---|---|
| BO1 | Collector supply/out | G2 1/2” it |
| BI1 | Collector return/in | G2 1/2” it |
| WO1 | Heat supply/out | G2” it |
| WI1 | Heat return/in | G2” it |
| 2 | Ventilation | 125 mm |

## G-Eco Core 80 – installation dimensions

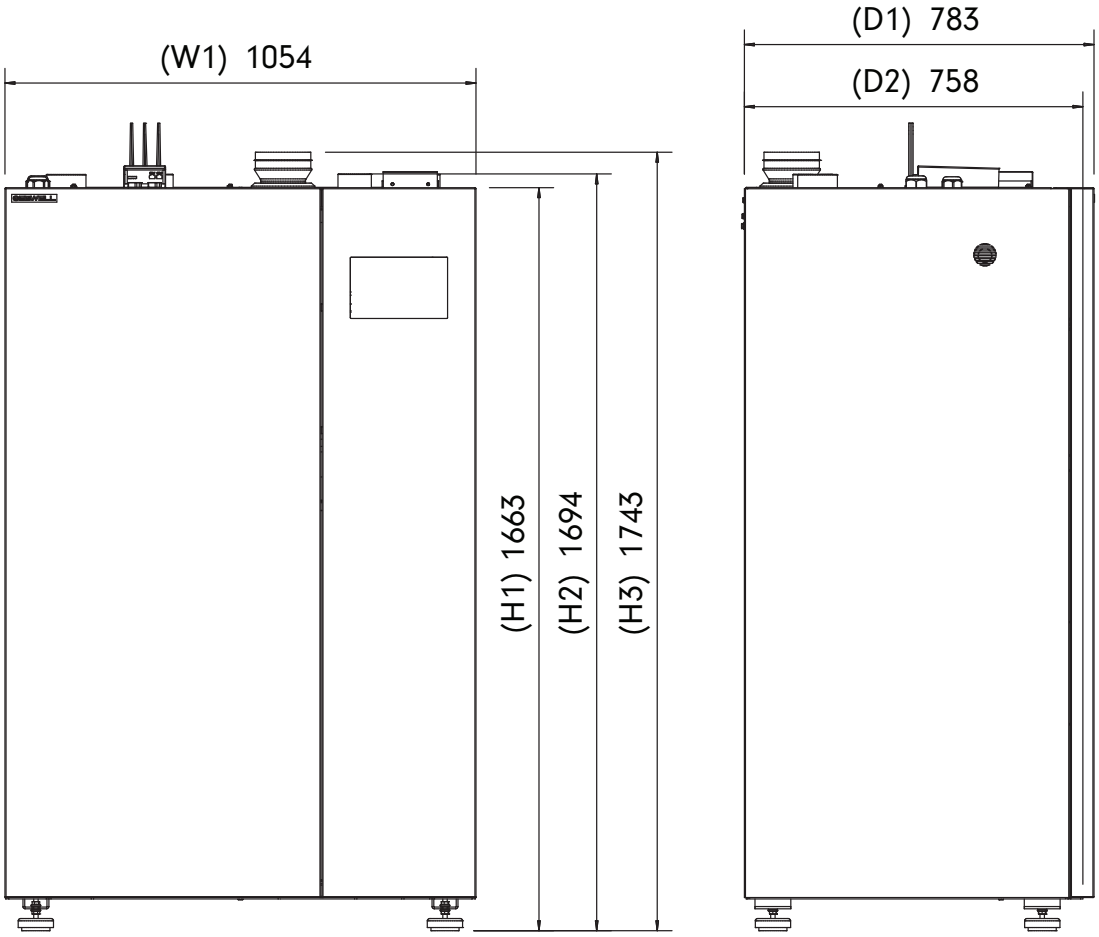


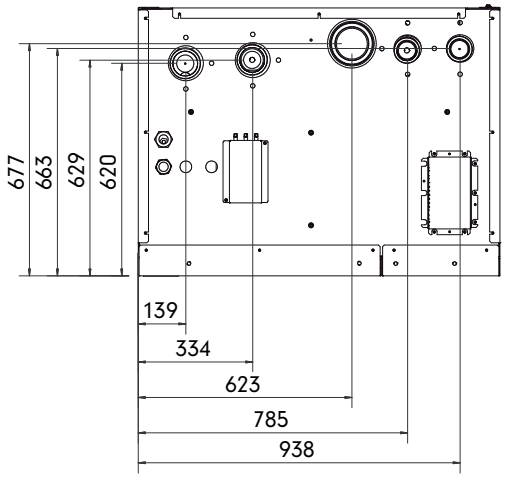


### Service area required

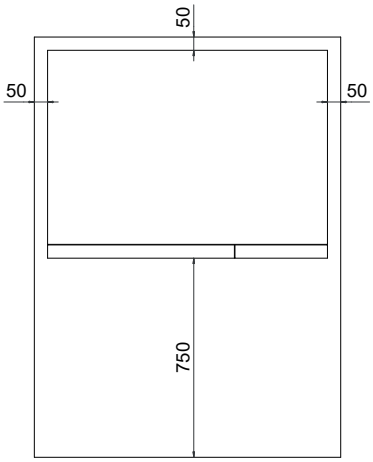

# G-Eco® Pro 120 | 120 HT – Dimensions

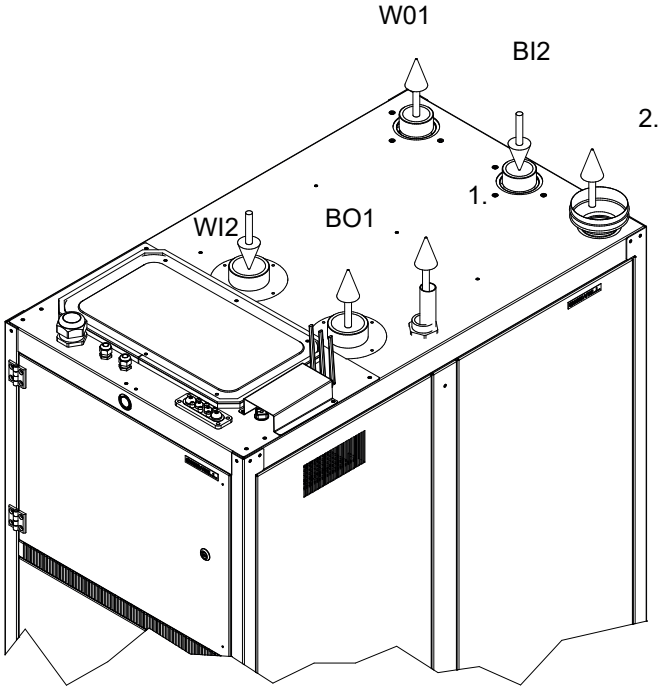


| | Dimensions | | Connection | Size |
|---|---|---|---|---|
| D | 1,250 mm | BO1 | Collector supply/out | G2 1/2" it |
| W | 750 mm | BI2 | Collector return/in | G2 1/2" it |
| H | 1,870 mm | WO1 | Heat supply/out | G2 1/2" it |
| | | WI2 | Heat return/in | G2 1/2" it |
| | | 1 | Venting discharge | Cu 35 mm |
| | | 2 | Ventilation | 125 mm |

## G-Eco Pro 120 | 120 HT – Installation dimensions

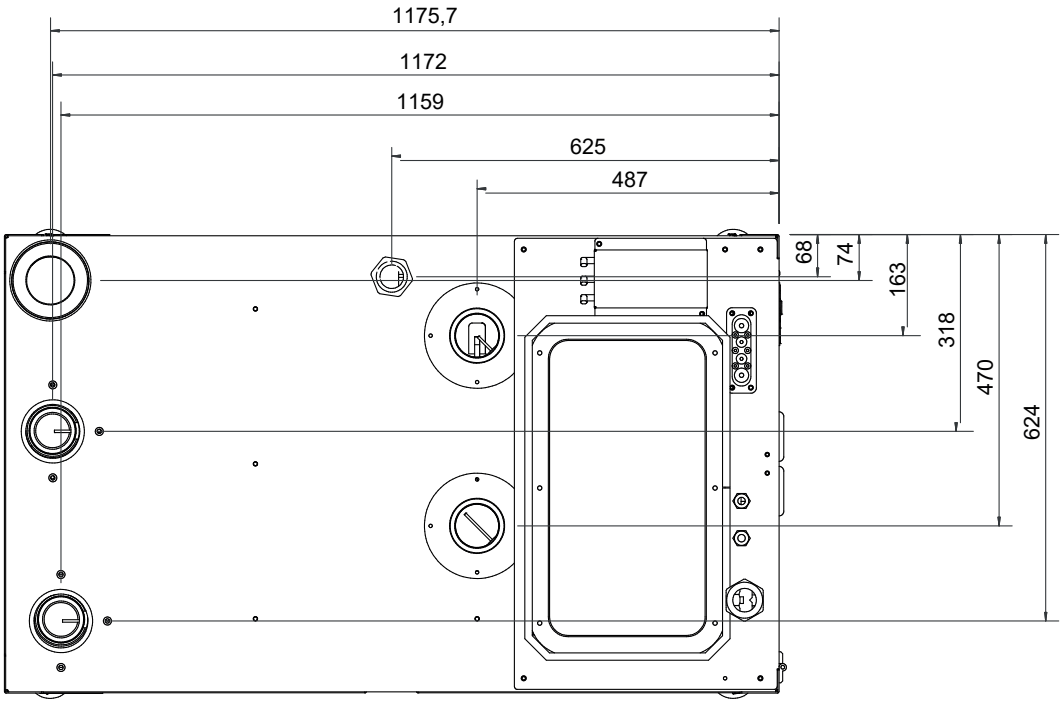


## G-Eco Pro 120 | 120 HT heat pump – service area required

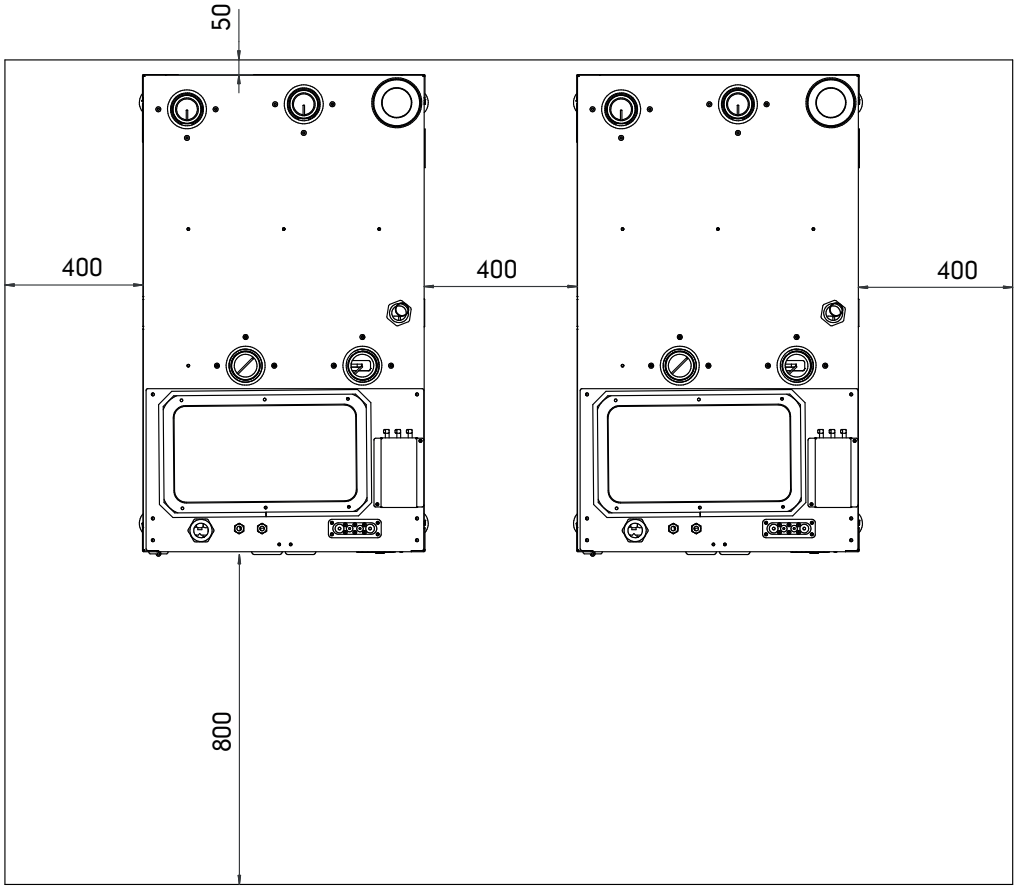

# G-Energy buffer tanks

## Reliability and efficiency throughout the system

G-Energy buffer tanks improve the heat pump system's stability and energy-efficiency and extend its service life. A buffer tank increases the system's water capacity, which evens out load fluctuations, ensures adequate flow, and improves the heat pump's operating conditions.

When the system has sufficient water capacity, the number of heat pump starts and stops is reduced. This extends the compressor's duty cycles, reduces strain on the unit, and ensures reliable operation throughout the life cycle.

# G-Energy buffer tank

- Available in 501-, 750- and 1,000-litre models, with DN50 and DN65 connections and in a pressure class of 6 bar.
- The tank is made out of steel, primed and pressure tested.
- The insulation is made out of die-cast closed-cell polyurethane.
- The standard-issue insulation is made out of detachable segments, which are easy to detach and reattach.
- The outer surface of the insulation segments is made out of painted steel plate with a protective coating.
- The steel base at the bottom of the accumulator tank makes hauling easier. The steel base has two parts; the lower section can be removed before installation. When lowered, the height of the 501-litre accumulator is 90 mm lower than the standard, while the 750-litre accumulator and the 1,000-litre accumulator are 130 mm and 150 mm lower, respectively.

# G-Energy SV buffer tank

**G-Energy SV buffer tanks feature connections for electric immersion heaters.**

- The G-Energy SV buffer tank is equipped with three connections for electric immersion heaters.
- According to need, the accumulator is equipped with electric immersion heaters to ensure sufficient heating.
- Equipping the accumulator with electric immersion heaters enables, for instance, a wood-heated house to be heated with electricity during a holiday trip. Electric immersion heaters are ordered separately.

# G-Energy PW buffer tank

**G-Energy PW buffer tanks are suitable for domestic water preheating and heating system buffer tanks.**

- In properties with a heat pump, the preheating of domestic water enables the domestic hot water to be heated more energy-efficiently and improves the sufficiency of domestic hot water.
- Two flanges for domestic hot water preheating coils.
- The PW buffer tanks are also equipped with three connections for electric immersion heaters

# G-Energy buffer tank

- Gebwell G-Energy DHW is a stainless steel buffer tank for hot domestic water. The G-Energy DHW buffer tank contains hot domestic water ready for use.
- The G-Energy DHW is especially well suited as a part of heat pump systems for real estate that take advantage of superheating technology and as a post-heating accumulator.
- The G-Energy DHW tank is made of stainless steel (EN1.4521), with a design pressure of 1.0 MPa (10 bar).
- The accumulator is insulated with a 95 mm thick Neopor insulation and encased in a polypropylene cover.
- The buffer tank features a vertical coil and two connections for electric heaters.

# G-Energy Cooling buffer tank

**G-Energy Cooling is a buffer tank developed for cooling systems.**

- Can be used as a buffer tank for, e.g., water coolers and other mechanical cooling systems. Buffer tanks even out the conditions between the start-up times of cooling equipment and reduce the number of times compressors need to be started.
- Available as 501- and 1,000-litre models and in pressure class 6 bar.
- The G-Energy Cooling tank is available either with a surface-treated finish or in stainless steel. The accumulator tanks are pressure-tested.
- 19-mm cellular rubber insulation
- The steel base at the bottom of the accumulator tank makes hauling easier. The steel base has two parts; the lower section can be removed before installation. When lowered, the height of the 501-litre accumulator is 90 mm lower than the standard and the 1,000-litre accumulator is 150 mm lower.

# G-Energy Coil buffer tank

**Equipped with coils, G-Energy Coil is suitable for heating domestic hot water together with a heat pump.**

- Available as 501-, 750- and 1,000-litre models in pressure class 6 bar.
- Depending on the size, the accumulator includes two to five 25-metre long coils. The 501-litre model is equipped with two or three coils. The 750-litre models are equipped with three to four coils and 1,000-litre models with two to five coils.
- The 501- and 1,000-litre models are equipped with two connections for electric immersion heaters and the 750-litre model with three connections. Electric immersion heaters are ordered separately.
- Also available as a low-height model. The low-height model is 2,000 mm tall with the insulation in place, and 1,980 mm with the insulation detached.
- The steel base at the bottom of the accumulator tank makes hauling easier. The steel base has two parts; the lower section can be removed before installation. When lowered, the height of the 501-litre accumulator is 90 mm lower than the standard, while the 750-litre accumulator and the 1,000-litre accumulator are 130 mm and 150 mm lower, respectively.

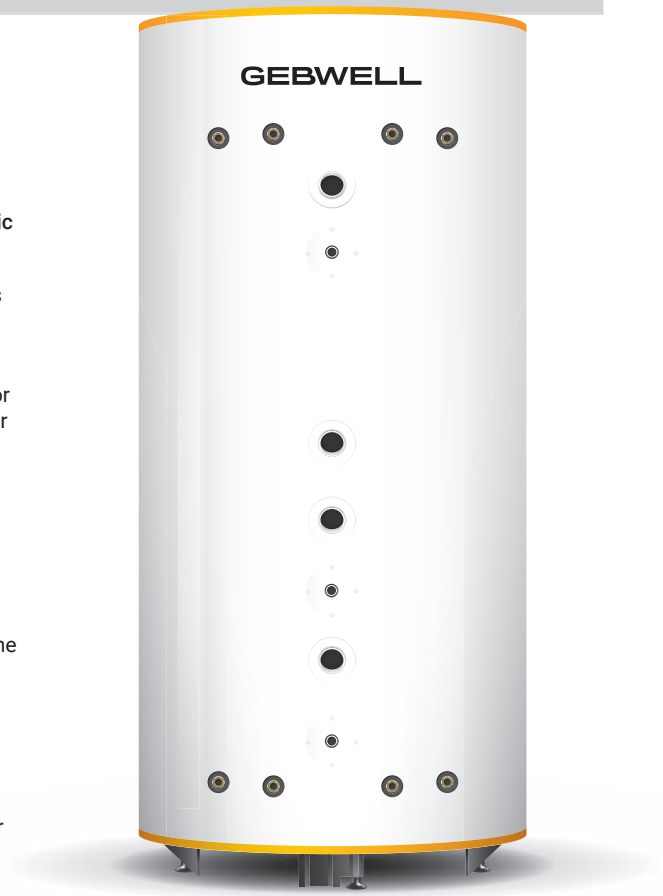


# G-Energy Custom accumulator tank

- A special accumulator designed for installations that are not suitable for our standard models.
- Equipped with flexible features, the special model is fully customisable. The customer can select the capacity, material, pressure class and insulation material of the accumulator.
- The size of the connections, in addition to the number and location of the connections and the sensor pockets, can also be customised.
- The special accumulator is available either with or without a bulkhead.

# Accessories for heat pumps

**Gebwell Ltd.'s product portfolio includes a wide range of factory-made accessories designed to speed up and simplify installation while ensuring a neat and professional end result.**

## Collector valve group

The valve group makes it easy to fill and vent the collector. In addition, the dirt filter removes any dirt particles in the liquid circulation.

The valve assembly is intended as an accessory for all Gebwell heat pumps.

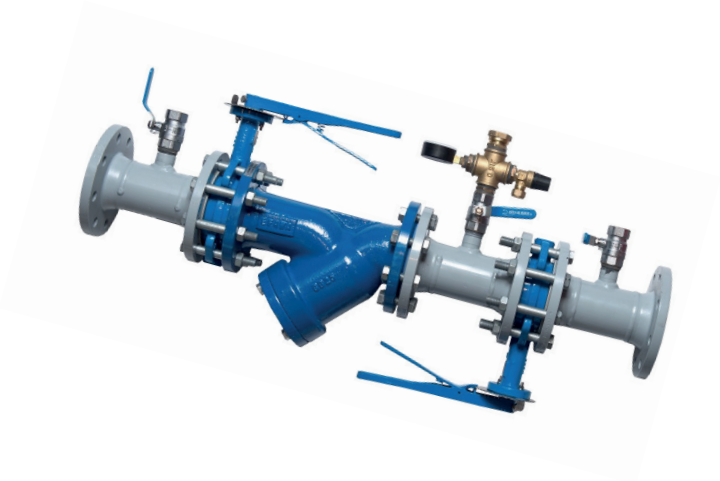

## Heating control group

The control group makes it easy to adjust the heating circuit.

Connecting the heating control group to the heating network is effortless. By connecting another heating control group, it is possible to control the heating of, for example, wet areas separately from the rest of the building.

The heating control group is intended as an accessory for all Gebwell heat pumps. The control group includes a heating pump, a shut-off valve, a control valve with actuators, a dirt filter and the necessary sensors, electric cables, hangers and wall-mounting rails.

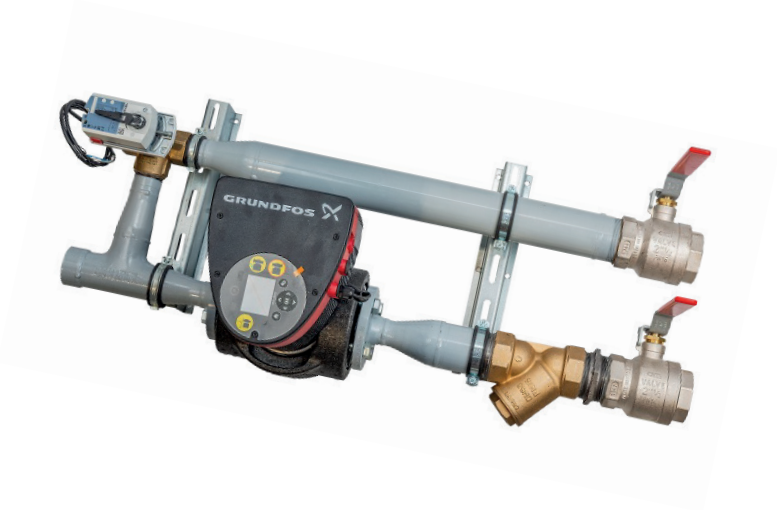

# Change-over valve set

The change-over valve set directs the water flow to domestic hot water production or to heating system water circulation.

The change-over valve set includes a change-over valve and an actuator. Intended as an accessory for G-Eco Core, Taurus EVIC, Taurus Inverter Pro, and G-Eco Pro heat pumps.

# Domestic hot water circulator pump set

Circulator pump set for domestic hot water circulation.

The circulator pump set includes a circulator pump, a pump valve and a balancing valve.

# Domestic hot water shunt

The DHW shunt transfers heat from the accumulator to domestic hot water production.

The DHW shunt includes a 3-way valve, an actuator and connectors, nuts and a sensor. The DHW shunt with a heat exchanger includes a heat exchanger, a circulator pump, connectors and a sensor.

# Notes:

GEBWELL

PUHDASTA LÄMPÖÄ

# More reliable energy solutions for your property

**Our experts will help you find a solution that fits your project. We'll help you with dimensioning, device selection, and the next steps of your project.**

Patruunapolku 5, FI-79100 Leppävirta, FINLAND
+358 20 1230 800 | info@gebwell.fi

**gebwell.com**

Gebwell Ltd reserves the right to changes.

hpcy heat pump city of the year

Gebwell Ltd and its partners have been awarded the EHPA Next Generation Heat Pump Award.